Instructions - Parts

Stainless Steel, Air-Driven Agitators with Pressure Tank

3A4797K

EN

Radial Piston air driven agitators for maintaining suspension and even-mixing in industrial paints and coatings. For professional use only.

Pressure Tank

100 psi (0.7 MPa, 7 bar) Maximum Working Pressure

Agitator

70 psi (0.5 MPa, 5 bar) Maximum Recommended Operating Pressure

See page 3 for model information, including maximum working pressure and approvals.

Important Safety Instructions

Read all warnings and instructions in this manual before using the equipment. Be familiar with the proper control and usage of the equipment. Save these instructions.

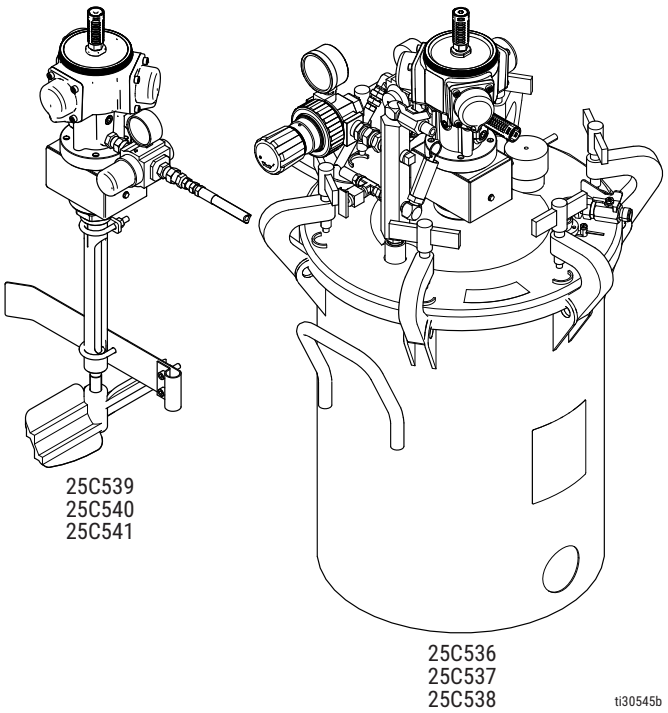

Contents

Contents 2
Related Manuals 2
Models 3
Safety Symbols 4
General Warnings 5
Installation 7
Agitator 9
Grounding 11
Operation 12
Pressure Relief Procedure 13
Maintenance 14
Service 16
Parts 19
Tank Parts for Models 25C536, 25C537, 25C53821
Accessories 23
Air Consumption 24
Dimensions 25
Technical Specifications 27
California Proposition 65 27
Graco Standard Warranty 28

Related Manuals

Find English manuals and any available translations at www.graco.com.

Manual in English	Description
3A4792	Air-Driven Agitators
3A4800	Twistork® Helix Agitator
3A5050	Agitator Air Motor Rebuild Kits

Models

Agitators with Pressure Tank

Part No.	Description	Approvals
25C536	Agitator with Pressure Tank 5 Gallon	**ASME** CE 2776 **II 1/2 G Ex h IIB T4 Ga/Gb** **CML 24ATEX6027X** **IECEx CML 24.0020X** **0°C ≤Tamb ≤50°C**
25C537	Agitator with Pressure Tank 10 Gallon	
25C538	Agitator with Pressure Tank 15 Gallon	

Agitators without Pressure Tank

Part No.	Description	Approvals
25C539	Agitator (to be used with a 5 gallon tank)	CE 2776 **II 1/2 G Ex h IIB T4 Ga/Gb** **CML 24ATEX6027X** **IECEx CML 24.0020X** **0°C ≤Tamb ≤50°C**
25C540	Agitator (to be used with a 10 gallon tank)	
25C541	Agitator (to be used with a 15 gallon tank)	

Motor Conversion Kit

Part No.	Description	Approvals
19A844	To covert a rotary vane air motor gear-reduced drive unit with a radial piston air motor (direct drive).	CE **II 2 G Ex h IIB T4 Gb**
26B168	To covert a 3rd party rotary vane air motor gear-reduced drive unit with a radial piston air motor (direct drive). Converts the following Binks tank models: 183x–2_3, 183x–5_3, 183x–10_3, and 183x–15_3. • x in the model number is G or S. • _ in the model number is 1, 2, 3, or 4.	

Safety Symbols

The following safety symbols appear throughout this manual and on warning labels. Read the table below to understand what each symbol means.

Symbol	Meaning
	Burn Hazard
	Crush Hazard
	Equipment Misuse Hazard
	Fire and Explosion Hazard
	Entanglement Hazard
	Pressurized Equipment Hazard
	Splash Hazard

Symbol	Meaning
	Toxic Fluid or Fumes Hazard
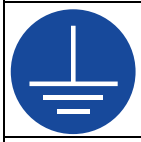	Ground Equipment
	Follow Pressure Relief Procedure
	Ventilate Work Area
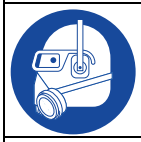	Wear Personal Protective Equipment
	Eliminate Ignition Sources

Safety Alert Symbol
This symbol indicates: Attention! Become Alert! Look for this symbol throughout the manual to indicate important safety messages.

General Warnings

The following warnings are for the setup, use, grounding, maintenance, and repair of this equipment. The exclamation point symbol alerts you to a general warning and the hazard symbols refer to procedure-specific risks. When these symbols appear in the body of this manual, refer back to these Warnings. Product-specific hazard symbols and warnings not covered in this section may appear throughout the body of this manual where applicable.

⚠ WARNING

FIRE AND EXPLOSION HAZARD

Flammable fumes, such as solvent and paint fumes, in **work area** can ignite or explode. Paint or solvent flowing through the equipment can cause static sparking. To help prevent fire and explosion:

- Use equipment only in well ventilated area.
- Eliminate all ignition sources; such as pilot lights, cigarettes, portable electric lamps, and plastic drop cloths (potential static arc).
- Ground all equipment in the work area. See **Grounding**, page 11 instructions.
- Never spray or flush solvent at high pressure.
- Keep work area free of debris, including solvent, rags and gasoline.
- Do not plug or unplug power cords, or turn power or light switches on or off when flammable fumes are present.
- Use only grounded hoses.
- Hold gun firmly to side of grounded pail when triggering into pail. Do not use pail liners unless they are antistatic or conductive.
- **Stop operation immediately** if static sparking occurs or you feel a shock, Do not use equipment until you identify and correct the problem.
- Keep a working fire extinguisher in the work area

MOVING PARTS HAZARD

Moving parts can pinch, cut or amputate fingers and other body parts.

- Keep clear of moving parts.
- Do not operate equipment with protective guards or covers removed.
- Equipment can start without warning. Before checking, moving, or servicing equipment, follow the **Pressure Relief Procedure** and disconnect all power sources.

PRESSURIZED EQUIPMENT HAZARD

Fluid from the equipment, leaks, or ruptured components can splash in the eyes or on skin and cause serious injury.

- Follow the **Pressure Relief Procedure** when you stop spraying/dispensing and before cleaning, checking, or servicing equipment.
- Tighten all fluid connections before operating the equipment.
- Check hoses, tubes, and couplings daily. Replace worn or damaged parts immediately.

⚠ WARNING

EQUIPMENT MISUSE HAZARD

Misuse can cause death or serious injury.

- Do not operate the unit when fatigued or under the influence of drugs or alcohol.
- Do not exceed the maximum working pressure or temperature rating of the lowest rated system component. See **Technical Specifications** in all equipment manuals.
- Use fluids and solvents that are compatible with equipment wetted parts. See **Technical Specifications** in all equipment manuals. Read fluid and solvent manufacturer's warnings. For complete information about your material, request SDS from distributor or retailer.
- Do not leave the work area while equipment is energized or under pressure.
- Turn off all equipment and follow the **Pressure Relief Procedure** when equipment is not in use.
- Check equipment daily. Repair or replace worn or damaged parts immediately with genuine manufacturer's replacement parts only.
- Do not alter or modify equipment. Alterations or modifications may void agency approvals and create safety hazards.
- Make sure all equipment is rated and approved for the environment in which you are using it.
- Use equipment only for its intended purpose. Call your distributor for information.
- Route hoses and cables away from traffic areas, sharp edges, moving parts, and hot surfaces.
- Do not kink or over bend hoses or use hoses to pull equipment.
- Keep children and animals away from work area.
- Comply with all applicable safety regulations

TOXIC FLUID OR FUMES HAZARD

Toxic fluids or fumes can cause serious injury or death if splashed in the eyes or on skin, inhaled, or swallowed.

- Read Safety Data Sheets (SDSs) to know the specific hazards of the fluids you are using.
- Store hazardous fluid in approved containers, and dispose of it according to applicable guidelines.

BURN HAZARD

Equipment surfaces and fluid that is heated can become very hot during operation. To avoid severe burns:

- Do not touch hot fluid or equipment.

PERSONAL PROTECTIVE EQUIPMENT

Wear appropriate protective equipment when in the work area to help prevent serious injury, including eye injury, hearing loss, inhalation of toxic fumes, and burns. Protective equipment includes but is not limited to:

- Protective eyewear, and hearing protection.
- Respirators, protective clothing, and gloves as recommended by the fluid and solvent manufacturer.

Installation

Typical System

Be sure that all accessories are properly rated to withstand the pressures in the system.

Note: Throughout the manual, reference numbers and letters in parentheses refer to numbers and letters in figures and the parts drawings.

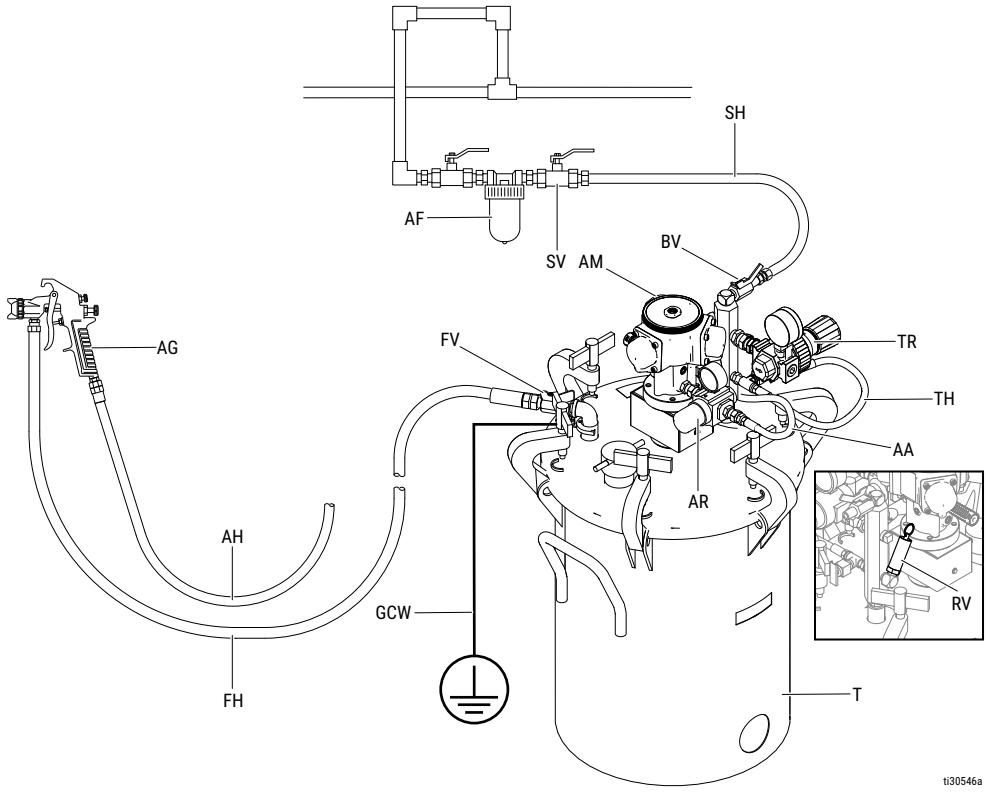

Reference	Sold Separately-Description	Reference	Included-Description
SH	Air supply hose	TH	Tank Air Inlet Hose
SV	Air Shutoff valve	RV	Safety relief valve (far side)
GCW	Ground clamp and wire	BV	Air inlet ball valve
AH	Atomizing air hose	FV	Fluid outlet ball valve
FH	Fluid hose	TR	Tank air regulator
AG	Air spray gun	AM	Air motor
AF	Air inlet filter	AR	Motor air regulator
T	Tank	AA	Agitator air inlet hose

Air Regulator and Mufflers

The air motor is capable of operating in a clockwise or counterclockwise direction, depending on where the air regulator is mounted. Clockwise direction is preferred for this blade orientation

- When the air regulator is installed in one of the two lower ports on the motor, a clockwise rotation results, as viewed from the top of the motor.
- When installed on either side in one of the two upper ports, a counterclockwise rotation results.
- The port opposite the regulator must be plugged for the motor to operate.

The air regulator, mufflers, air gauge, nipple connector, and swivel connector are not factory installed on models 25C539, 25C540, and 25C541. Follow the directions below to install these items:

1. Screw the swivel connector (F) (see below) into the desired port (upper or lower) in the motor (K).
2. Screw the nipple connector (G) into the air regulator (H) outlet. Note arrow directions on the regulator.
3. Attach the air regulator by screwing it into the swivel connector.
4. Install a plug (E) in the port opposite the regulator (this is necessary for motor operation).
5. Attach the air gauge (J) by screwing it into the hole in the top of the air regulator.
6. Install a plug (E) in the regulator in the port opposite the air gauge.
7. Screw one muffler (D) into the top of the motor.
8. Screw the second muffler into the open port on the far side of the motor from the regulator.
9. Install the third muffler in the open port above or below the regulator. An additional fitting may be needed (not provided) to space the regulator farther away from the motor.

NOTE: Use of the third muffler is not necessary, but is beneficial for increased air circulation in humid conditions. If a third muffler is not used, the hole must be plugged (E).

Clockwise Agitator Rotation

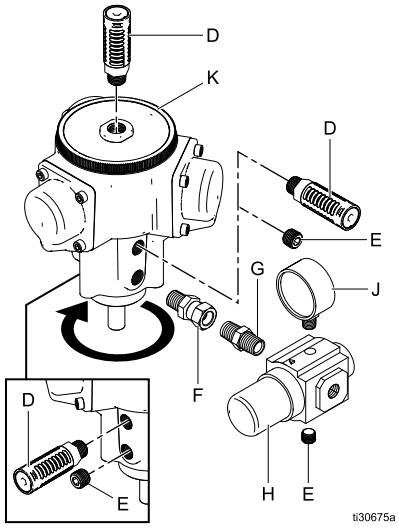

Counterclockwise Agitator Rotation

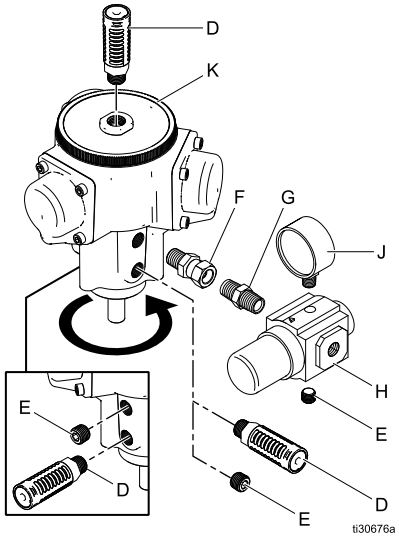

Reference Letter	Description
D	Mufflers
E	Plugs
G	Nipple connector
H	Air regulator
J	Air gauge
K	Air motor

Agitator

To reduce the risk of fire and explosion, always maintain a minimum of 1 in. (25.4 mm) clearance between the rotating agitator parts and the container to prevent sparks from contact.

- If installing a new agitator onto a new tank, follow steps 1– 2, and 7–15 (models 25C536, 25C537, 25C538).
- If replacing an established agitator, follow steps 1, 3–12, and 14–15 (models 25C539, 25C540, 25C541).
- If replacing the agitator drive with kit 19A844, follow the steps described in **Installing Motor Conversion Kits**, page 17.

1. Relieve pressure from the system (if applicable) by following the procedure in the **Pressure Relief Procedure**, page 13, and remove the pressure tank cover from the tank.
2. Unscrew and remove the hex jam nut (49), plug (P), and o-ring (R) from the tank cover.
3. Remove the upper U-bolt (56).
4. Loosen the two agitator paddle set screws (46) and remove the agitator paddle (45).
5. On 10 and 15 gallon tanks, remove the lower U-bolt (56), loosen screws (54), and slide the baffle (53) off the fluid tube (12).
6. Unscrew and remove the hex jam nut (49), gasket (50), and agitator from the tank cover.
7. To install the new agitator, place the gasket (50) on top of the tank cover center hole. Insert the agitator shaft (47) through the gasket and center hole.

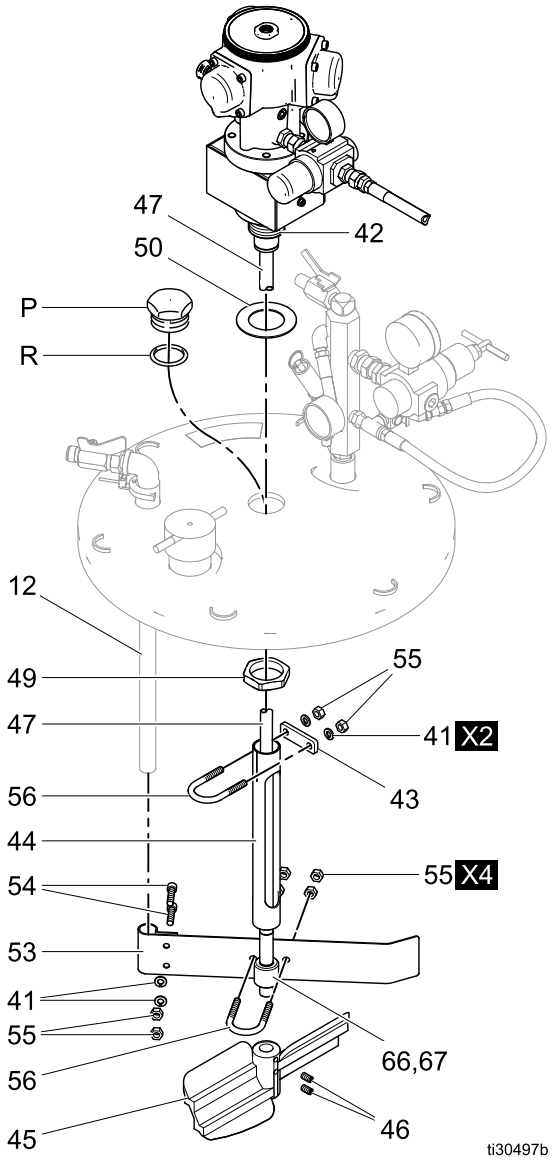

FIG. 1

NOTE: Position the air motor and regulator as shown above.

8. Install the jam nut (49) below the tank cover, and tighten firmly to assure a seal between the gasket (50) and tank cover.
9. Install the shaft support (44) onto the shaft housing (42). Verify lower thrust washer (48) is between shaft (47) shoulder and housing (42).

10. Clamp with upper U-bolt (56), clamp (43), lockwasher (41), and nut (55).

11. On the 10 and 15 gallon tanks, place the lower bearing assembly (66) and (67) on the shaft.

12. Assemble the paddle (45) on the shaft (47). See the figure below. Align the bottom of the paddle hub flush with the bottom of the shaft. Tighten the two set screws (46) firmly to secure the paddle. The paddle height on the shaft can be adjusted if desired. The bottom mark (H) on the shaft is the lowest recommended paddle position on the shaft. Align the top of the paddle hub with this mark (H) for the lowest position.

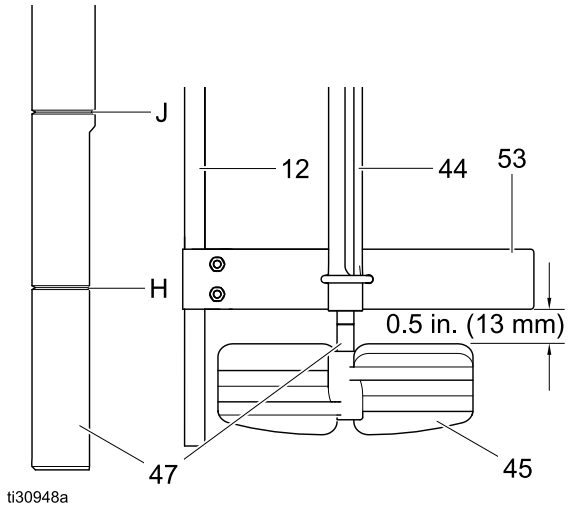

FIG. 2

- For 5 gallon tanks: *If a 5 gallon pain is to be placed inside* the pressure tank, align the top of the paddle hub(45) with the upper mark (J) on the agitator shaft (47).

13. Note the orientation of the baffle (53) in the FIG. 1. On the 5 gallon tank, clamp the lower U-bolt directly to the shaft support (44) (see figure above). Slide the baffle (53) over the fluid tube (12) and position the baffle about 1/2 in. (13 mm) above the highest point on the agitator paddle (45). Clamp in place with the lower U-bolt (56), and double nuts (55). Tighten double nuts after verifying no binding exists in the agitator shaft. On the 10 and 15 gallon tanks, slide the baffle (53) over the fluid tube (12) and position the baffle about 1/2 in. (13 mm) above the highest point on the agitator paddle (45). Clamp in place with the lower U-bolt (56), and double nuts (55) on the lower bearing assembly (66) and (67). Tighten double nuts after verifying no binding exists in the agitator shaft. Incorrect orientation of the baffle (53) to the shaft can cause binding of the agitator assembly resulting in higher operating pressures needed to run the agitator. The agitator should run at less than 10 psig (0.7 bar) when dry.

14. Remove the plug or existing elbow from the air inlet manifold (5). Install the new elbow (69) into the pressure tank air inlet manifold.

15. Connect the swivel end of the air hose (70) to the elbow (69).

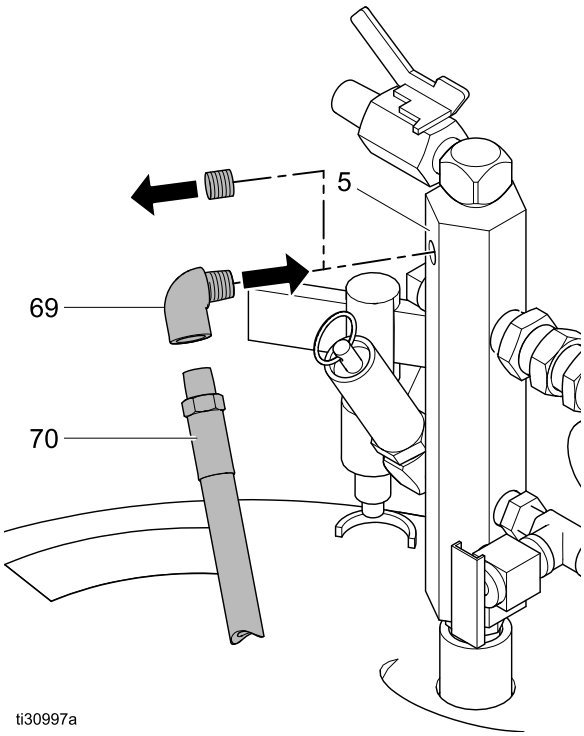

FIG. 3

Grounding

The equipment must be grounded to reduce the risk of static sparking. Static sparking can cause fumes to ignite or explode. To reduce the risk of static sparking, the mounting cover and all electrically conductive objects or devices in the spray area must be properly grounded.

A ground wire and clamp are included with the tank.

- To ground the agitator, connect one end of the ground wire (GW) to the ground connector (77) on agitator drive guard (74). Connect the other end of the ground wire to a true earth ground.

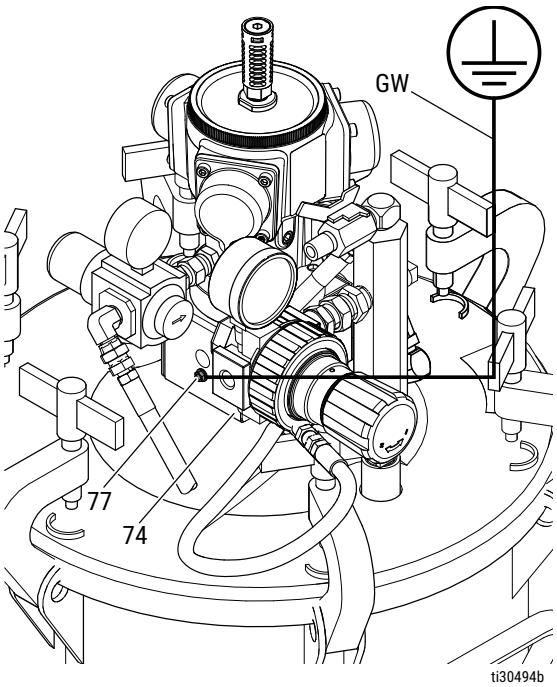

FIG. 4

- To ground the pressure tank, connect one end of a 12 awg (1.5 mm2) minimum ground wire to the pressure tank and the other end of the wire to a true earth ground.

Connecting Hoses

Install an air inlet filter (AF) upstream from the air inlet ball valve (17) to remove dirt and moisture from the compressed air supply. Connect an air supply hose (SH) between the air inlet ball valve and the air filter air outlet.

Connect the atomizing air hose (AH) to the air spray gun (AG) from an air outlet of the air manifold.

Connect a fluid hose (FH) between the fluid outlet ball valve (18) and the air spray gun (AG) fluid inlet.

Recommended Hose Sizes

General purpose hose sizes are listed below.

Fluid		Air	
For runs of:	Use:	For runs of:	Use:
0 to 35 ft (0 to 11 m)	3/8" ID	0 to 50 ft (0 to 15 m)	5/16" ID
35 to 100 ft (11 to 30 m)	1/2" ID	50 to 100 ft (15 to 30 m)	3/8" ID
100 to 200 ft (30 to 61 m)	3/4" ID	100 ft+ (30 m+)	1/2" ID

Air Line Filter

Air line filters remove harmful dirt and moisture from the compressed air supply. Order part 106148 for 3/8 npt or 106149 for 1/2 npt.

Operation

Personal injury, such as splashing in the eyes, may result from pressure in the tank. Always follow the **Pressure Relief Procedure**, page 13 before opening the tank cover or fill port.

Personal injury or equipment damage may result from lifting/falling heavy equipment. To avoid personal injury or equipment damage:

- Do not lift the drum cover and agitator without proper assistance.
- Do not walk or stand beneath a raised elevator

Preparing the Fluid

Prepare the fluid according to manufacturer instructions. Strain the fluid to remove large particles that could clog the spray gun or the siphon tube.

Filling the Tank

Agitators are used to keep solids in suspension, which assists in keeping solids from clogging the siphon tube. If solids have settled in the container, use a shaker or some other device to thoroughly agitate the fluid before installing and operating the agitator.

1. Follow the **Pressure Relief Procedure**, page 13.
2. Fill the fluid supply container (through the fill port in the cover, or remove the cover and pour fluid directly into the tank) to about 3 or 4 inches (75 to 100 mm) above the agitator blade. If utilizing a 5-gallon tank, use one of the following methods for paint placement:
   a. Remove the cover and place a 5-gallon pail* of fluid in the 5-gallon tank.
   b. Remove the cover and place a 5, 10, or 15 gallon anti-static polyethylene liner in a corresponding 5, 10, or 15 gallon tank. Pour the fluid into the anti-static polyethylene liner (see **Accessories**, page 23).
   c. Fill the tank through the fill port in the cover, or remove the cover and pour fluid directly into the tank. Do not exceed the suggested capacity (5, 10 or 15 gallons) of your tank.

* Putting a 5 gallon pail of fluid is not recommended in 10 and 15 gallon tanks. It may require modification of the suction tube to allow clearance between the suction tube and the pail.

NOTE: If a 5-gallon pail is used inside the tank, an adjustment is required to the agitator paddle position to avoid interference. See step 12 in **Agitator**, page 9, for adjustment information.

3. Be sure the ground wire is attached.
4. Replace the filler cap or cover, tighten the c-clamp handles (27a) to 8-10 ft-lbs, approximately 1/2 to 1 turn past hand tight.

Operating the Agitator

Over-pressurizing the tank or accessories could cause a part to rupture. To reduce the risk of serious injury, such as splashing, or property damage, never exceed the maximum air and fluid working pressure of the lowest rated component in your system.

NOTICE

To avoid damaging the equipment, do not operate the agitator at a high speed for a long period of time. Excessive agitator speed can cause foaming of fluid (making the fluid unusable), vibration, and increased wear on parts. Only agitate the fluid enough to maintain even mixing

1. Fill the pressure tank.See **Filling the Tank**, page 12.
2. Be sure the air inlet ball valve (17) is closed
3. Close the air regulator valves (31, 38) by turning the knobs counterclockwise.
4. Turn on the air supply.

5. Open the air supply inlet ball valve (17).

6. To start the agitator, slowly open the agitator air regulator valve (38). Adjust the speed of the agitator, to about 40 to 60 rpm, if needed.

7. Open and adjust the tank air regulator (31) to the approximate pressure desired.

8. Open the fluid outlet ball valve (18).

9. Turn on the atomizing air to the air spray gun. Test spray a small area and adjust the pressure as necessary. Always use the lowest possible air pressure to obtain the desired results.

10. To stop the agitator, turn the air regulator counterclockwise to reduce pressure to zero, or close the air inlet ball valve (17) to the tank.

Pressure Relief Procedure

Follow the Pressure Relief Procedure whenever you see this symbol.

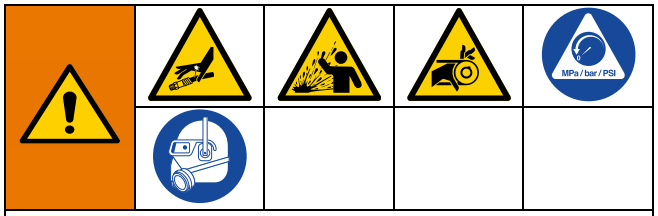

The agitator and pressure tanks remain pressurized until pressure is manually relieved. To help prevent serious injury from splashing fluid and moving parts, follow this procedure:

- Before you check or service any part of the spray system
- Before you loosen or remove the pressure tank cover of fill port
- Whenever you stop spraying

1. Shut off the air supply to the tank by closing the air inlet valve (17).

2. Open the drain cock fitting (7) by turning it counterclockwise.

3. Wait until there is no air escaping through the drain cock fitting before removing the cover or opening the fill port.

4. Leave the drain cock fitting (7) open until you have reinstalled the cover or fill port.

NOTE: After reinstalling the cover, tighten the c-clamp (27a) to 8-10 ft-lb. (10.8-13.6 N•m), approximately 1/2 to 1 turn past hand tight.

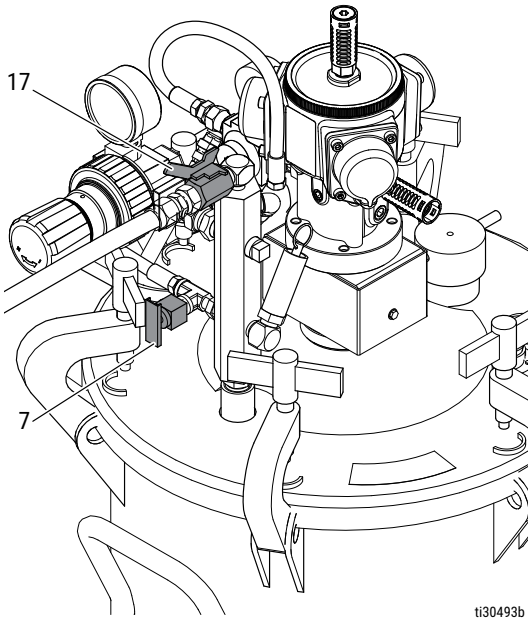

FIG. 5

Safety Relief Valve

A safety relief valve (4) automatically relieves the tank pressure when the air pressure exceeds 95 to 100 psi (0.5 to 0.6 MPa, 6.5 to 7 bar).

Each week, check the working order of the safety relief valve. *Only as a test*, raise the air pressure to 95 to 105 psi (0.5 to 0.6 MPa, 6.5 to 7.1 bar). If the safety relief valve does not relieve the pressure, replace it immediately. Do not attempt to repair it. The safety relief valve will reset automatically when the pressure is relieved.

Maintenance

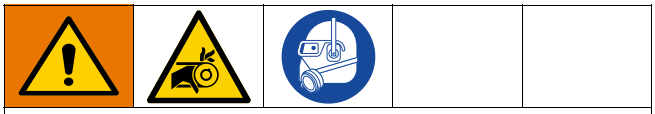

Moving parts, such as an impeller blade, can cut or amputate fingers. To reduce the risk of serious injury, always shut off the agitator and disconnect the air line before checking or repairing the agitator.

Before performing any maintenance procedure, follow the **Pressure Relief Procedure**, page 13.

Greasing the Air Motor

After every 20 million revolutions or every three to four months (whichever comes first), grease the motor needle bearing. Recommended grease: MOBILGREASE XHP 222 SPECIAL or equivalent with minimum flash point temperature of 399.2° F (204° C).

1. Follow the **Pressure Relief Procedure**, page 13.
2. Remove the motor top cover (103).
3. Using a manual grease gun, push grease into the 21RC fitting (102) until grease is seen below the top washer (109a).

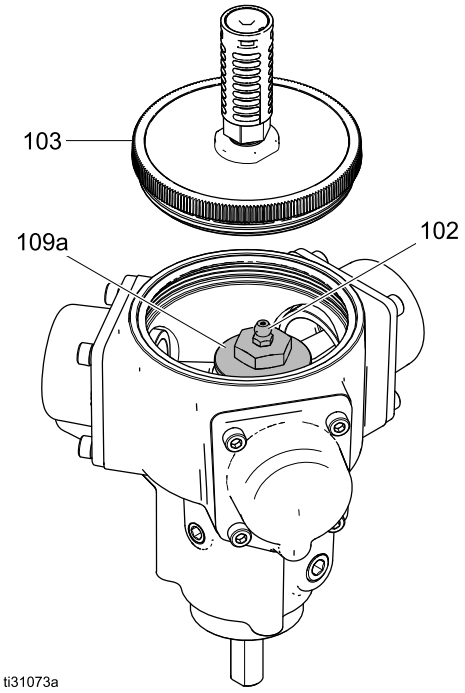

FIG. 6

Air Motor Muffler

Depending on the environment of the motor, periodically check the cleanliness of the air motor muffler. Dirty or clogged air mufflers result in decreased motor efficiency and may cause the motor to run irregularly. If the muffler is dirty or clogged, replace it with a new muffler.

Cleaning the Shaft

Each week, clean any dried fluid from around the bearing (66) area of the shaft (47) and inspect the bearing for cracking or excessive wear.

Cleaning the Tank

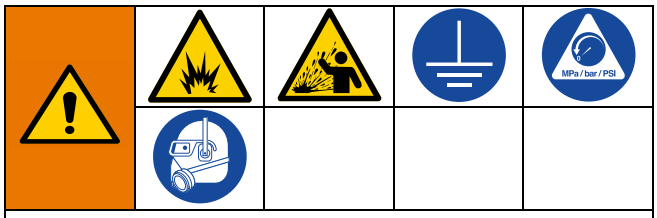

To avoid fire and explosion, always ground the equipment and waste container. To avoid static sparking and injury from splashing, always flush at the lowest possible pressure.

- Flush equipment only in a well-ventilated area.
- Flush at the lowest pressure possible. Check connectors for leaks and tighten as necessary.
- Flush with a fluid that is compatible with the fluid being dispensed and the equipment wetted parts.

1. Follow the **Pressure Relief Procedure**, page 13.
2. Follow the procedure below to force the fluid back through the hose and into the tank:
   a. Loosen the spray gun air cap retaining ring about two turns.
   b. Hold a rag over the air cap and trigger the gun for a few seconds, until the fluid is forced back into the tank.
3. Remove the tank cover.
4. Empty the fluid from the tank and pour a suitable amount of solvent into it.

NOTE: Be sure that the solvent is compatible with the fluid being sprayed and with the wetted materials in the tank. Refer to **Technical Specifications**, page 27, for information on wetted part materials.

5. Replace the tank cover and tighten the c-clamps (27a) to 8-10 ft-lb. (10.8-13.6 N•m), approximately 1/2 to 1 turn past hand tight.

6. Close the drain cock fitting (7).

7. Turn on the air supply.

8. Hold a metal part of the gun against a grounded metal waste container and trigger the gun into the waste container until clean solvent comes from the gun.

9. Remove the solvent from the system. Wipe the inside of the tank and the rest of the equipment clean with a solvent-dampened rag.

Service

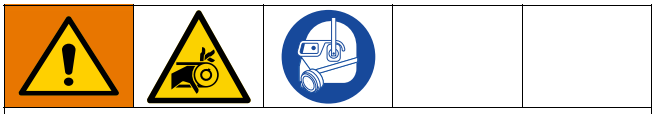

Moving parts, such as an impeller blade, can cut or amputate fingers. To reduce the risk of serious injury, always shut off the agitator and disconnect the air line before checking or repairing the agitator.

Before performing any service procedure, follow the **Pressure Relief Procedure**, page 13.

If the air motor requires more than installation of a service kit, it is usually quickest and easiest to send it to a Graco distributor for repair or replacement.

Motor rebuild kits are available and listed in the table below. See manual 3A5050 for more information.

Kit	Description
25M535	Full air motor rebuild kit
25P720	Needle bearing rebuild kit
25P721	Single piston assembly rebuild kit
25P860	End cap kit
19Y509	Muffler kit (set of 3)

Removing the Air Motor

To remove the air motor for service, follow these steps,

1. Remove the screw (75) holding the guard and then remove the guard (74).
2. Remove the four screws (26) securing the motor to the mounting bracket (58).
3. Remove the three screws (35) securing the motor (34) the adapter plate (22).
4. Disconnect the air regulator (38).

Installing the Air Motor

To install the air motor, follow these steps.

1. Secure the motor (34) to the adapter plate (22) using three screws (35) . Torque to 150–170 in-lbs (17–19 N•m).
2. Install the upper coupling half (52b) on the motor shaft. Lightly tighten the set screw. You will tighten it further in a later step.
3. Install the lower coupling half (52c) on the agitator shaft (47). Do not tighten the set screw at this time.
4. Install the motor (34) and adapter plate (22) assembly on the top of the bracket (58) using the four screws (26). Do not tighten the screws securely at this time.

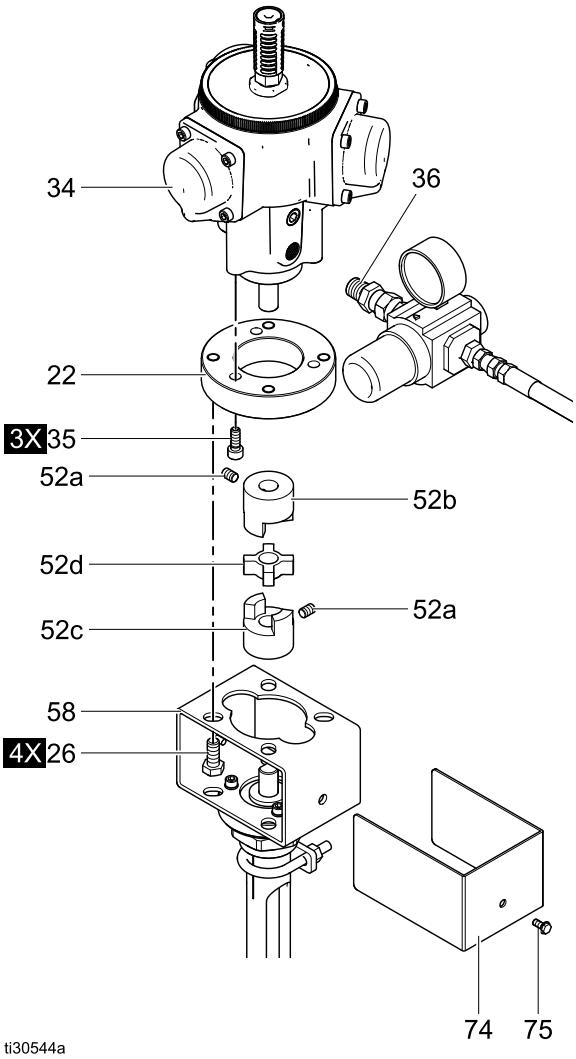

FIG. 7

Servicing the Agitator Shaft and Couplings

Setting the Agitator Shaft Coupling

1. With the agitator shaft (47) pushed up against the lower washer (48), secure the lower portion of the coupling half (52c) to the shaft by tightening the coupling set screw against the flat on the shaft.

Leave about a 0.015 in. (0.38 mm) gap between the coupling half and upper washer (48).

2. Align the upper coupling (52b) with the lower coupling and tighten the four screws (26). Tighten to 150–170 in-lbs (17–19 N•m). Leave a 0.015 in. (0.38mm) gap between each of the coupling halves and the spider (52d).

3. Connect the air regulator (38). Check for proper alignment by running the agitator at low pressures and speeds. If necessary, adjust the alignment by loosening and retightening the four adapter plate screws (26).

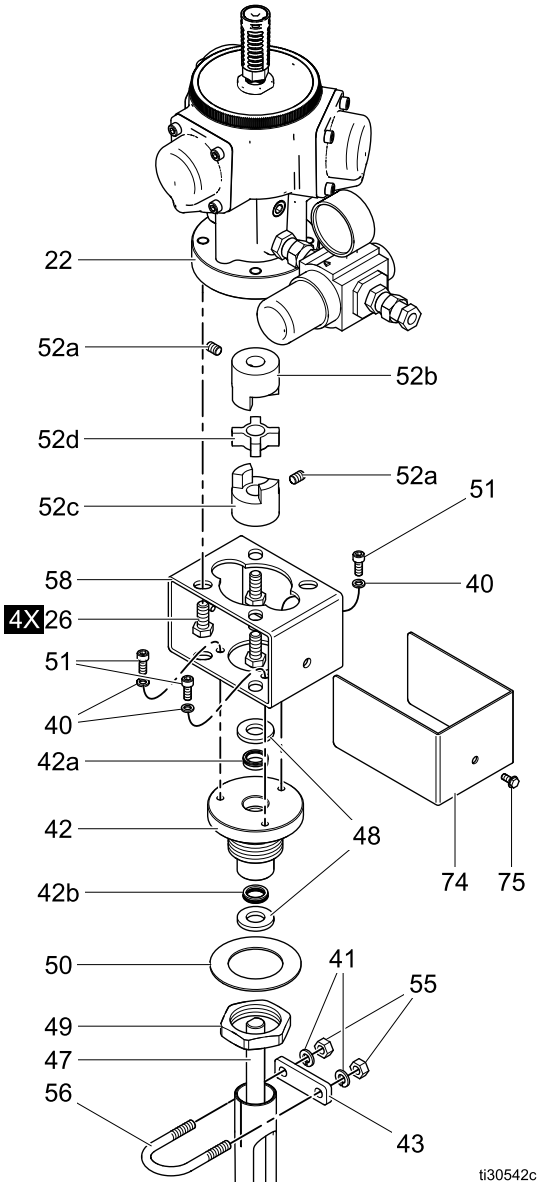

FIG. 8

Replacing the Agitator Shaft

1. Remove the agitator paddle (45). Remove the set screw from the lower coupling (52c). Pull out the agitator shaft (47) and install the new shaft. Replace the agitator paddle (45).

2. With the agitator shaft (47) pushed up against the lower washer (48), secure the lower portion of the lower coupling half (52c) to the shaft by tightening the coupling set screw against the flat on the shaft. Leave about a 0.015 in. (0.38 mm) gap between the coupling half and washer (48).

Replacing the Shaft Seals

1. Remove the guard mounting screw (75) and remove the guard (74).

2. Remove the three cap screws (51) and washers (40) from the mounting bracket (58), and remove the air motor assembly.

3. With air motor assembly removed, remove the set screw from the lower coupling half (52b). Pull out the agitator shaft (47).

4. Remove the hex nut (49) and remove the shaft housing (42). Remove the seals (42a, 42b) from the shaft housing, and install the new seals.

5. Reinstall the shaft housing and shaft. Use installation steps listed in Setting the Agitator Shaft Coupling.

Installing Motor Conversion Kits

Installing Motor Conversion Kit 19A844

1. Remove the existing motor and gearbox. See manual 308371 for instructions.

2. Remove the existing shaft assembly and turn the tank cover over in order to replace seal (42b) located inside the bearing housing (42). (See the figure in **All Models**, page 19.) Remove the existing seal (42b) and replace with a new seal. Reinstall the shaft assembly.

NOTE: If the existing shaft is damaged in the bearing housing area, replace the shaft with a new shaft for best sealing performance.

3. If replacing both shaft seals 42a and 42b, follow the steps in **Replacing the Shaft Seals**, page 17.

4. Install the air motor.See **Installing the Air Motor**, page 16 and **Servicing the Agitator Shaft and Couplings**, page 16.
5. Install the air regulator and mufflers. See **Air Regulator and Mufflers**, page 8.
6. Attach the fittings (36, 8) and the hose (70) to complete the conversion.

Installing Motor Conversion Kit 26B168

1. Loosen the upper hex head screw on the retaining bracket.
2. Remove the existing motor and gearbox, as well as any spacers.
3. Insert the air motor with adapter.
4. Install the air regulator and mufflers. See **Air Regulator and Mufflers**, page 8.
5. Attach the fittings (36, 8) to complete the conversion.
6. Check for proper alignment by running the agitator at low pressures and speeds. If necessary, adjust the alignment by loosening the three adapter screws and retightening while the agitator slowly spins.

Parts

All Models

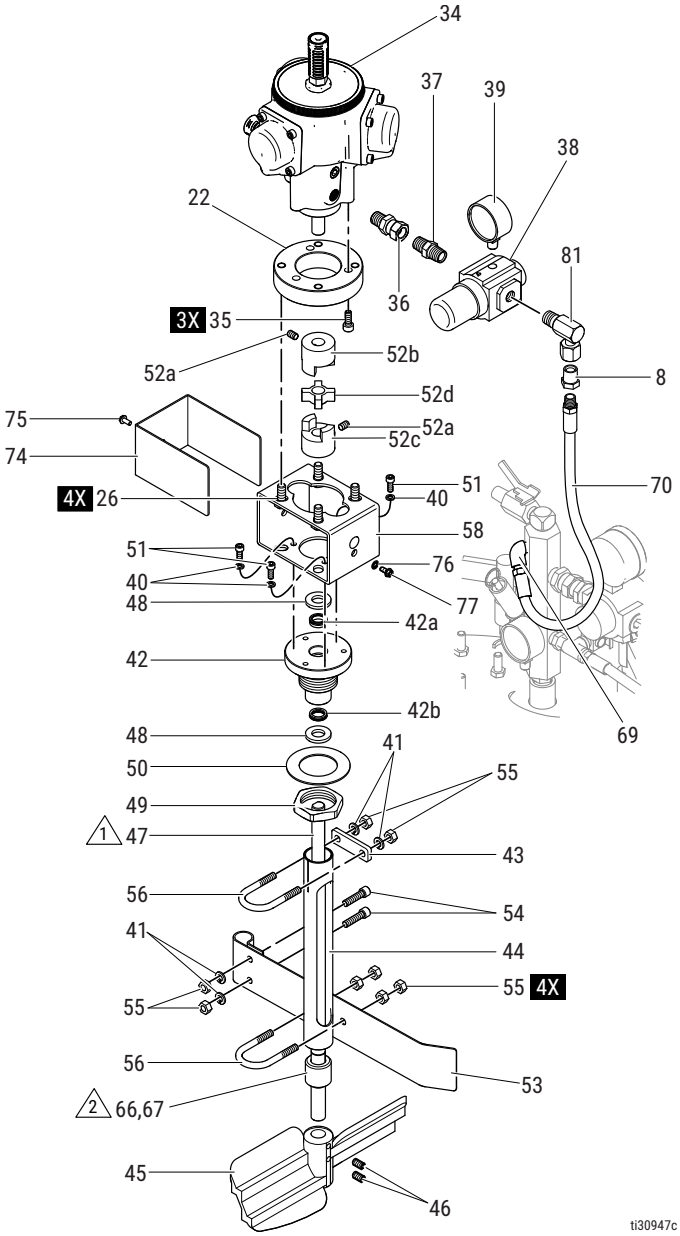

FIG. 9

1	Locate the bottom shoulder of the shaft (47) against the bottom washer (48) when assembling the coupler (52c).
2	Bearings 66 and 67 are not used on the 5-gallon model. Attach the U-bolt (56) to the support shaft (44).
Follow recommended torque specifications found in the Installation section of this manual.	

Ref No.	Part No.	Description	Qty
8**†	100030	Bushing	1
22**	17R038	Plate, Adapter, Agitator	1
26**	100057	Screw, Cap, Socket Head	4
34**†	25C765	Motor, Air, Rotary Piston; includes 36, 37, 38, 39. See manual 3A5050 for motor rebuild kits and muffler kits.	1
35**	124313	Screw, Shcs, M6-1 x 16 mm, Stainless Steel	3
35†	112674	Screw, SHCS, M6-1 x 35mm, Nickel Plated CS	3
36	156823	Fitting, Union, Swivel	1
37	156971	Fitting, Nipple, Short	1
38	116513	Regulator, Air	1
39	108190	Gauge, Pressure, Air	1
40	100020	Washer, Lock	3
41	104123	Washer, Lock, Spring	4
42	25T544	Housing Assembly, Shaft; includes 42a and 42b	1
42a	103553	Seal, shaft	1
42b	19B748	Seal, shaft	1
43	112533	Plate, Clamp	1
44	210576	Support, Shaft; includes item 66	1
45*	236098	Paddle, Agitator; plastic	1
46	131497	Screw, Set, Sch	2
47	188886	Shaft, Agitator; 15 inches; Models 25C536 and 25C539	1
	188887	Shaft, Agitator; 21 inches; Models 25C537 and 25C540	1
	188888	Shaft, Agitator; 31 inches; Models 25C538 and 25C541	1

Ref No.	Part No.	Description	Qty
48	104373	Washer, Thrust	2
49	188784	Nut, Jam, Hex	1
50	196309	Gasket	1
51	102598	Screw, Cap, Socket Head	3
52**	17R478	Coupling, Flexible	1
52†	19B501	Coupler, 3rd Party	1
52a†	120087	Set screws	2
53	171989	Baffle, Agitator	1
54	112222	Screw, Cap, Sch	2
55	112223	Nut, Hex, Regular	8
56	110278	Bolt, U	2
58	181749	Bracket, Mounting	1
66	171970	Bearing, PTFE; included with models 25C540 and 25C541 only	1
67	187324	Housing, Bearing; included with models 25C540 and 25C541 only	1
69	112307	Fitting, Street Elbow	1
70	164724	Hose, Coupled	1
74	194701	Guard, Agitator, Drive	1
75	100078	Screw, Thread Forming, Hex Head	1
76	157021	Washer, Lock, Int	1
77	111593	Screw, Grounding	1
78	186620	Label, Symbol, Ground	1
80▲	17P806	Safety Tag (not shown)	1
81	155541	Swivel, 90 degree	1

▲ Replacement safety labels, signs, tags, and cards are available at no cost.

* A welded 304 stainless steel paddle is available. Order part number 186517.

** Included with Motor Conversion Kit 19A844.

† Included with Motor Conversion Kit 26B168.

Tank Parts for Models 25C536, 25C537, 25C538

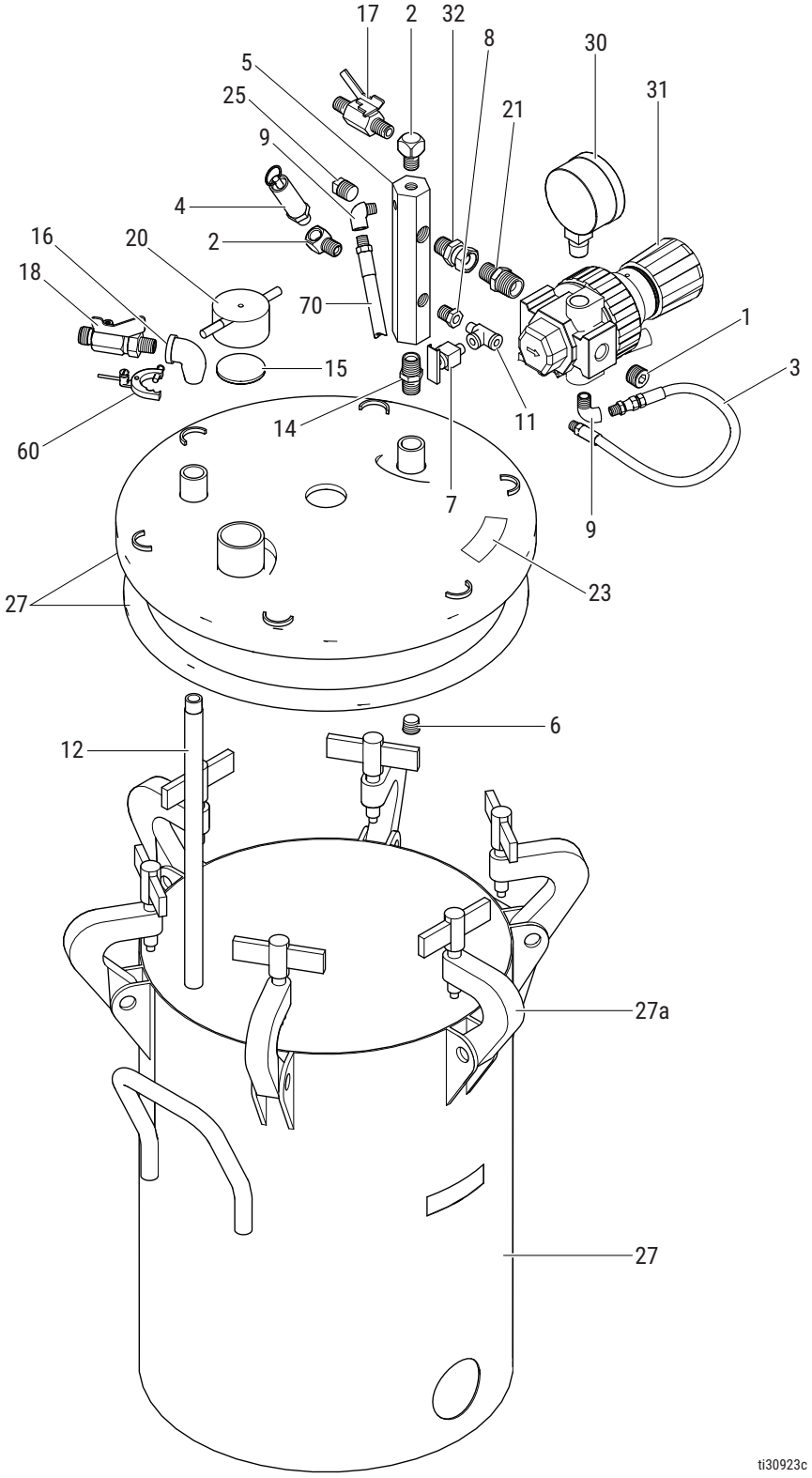

FIG. 10

Ref No.	Part No.	Description	Qty
1	100361	Plug, Pipe	1
2	100840	Fitting, Elbow, Street	2
3	164724	Hose, Coupled	1
4	103347	Valve, Safety; 100 Psi	1
5	189016	Manifold, Air, Inlet	1
6	112306	Plug, Pipe, Stainless Steel; 3/8 Npt	1
7	101759	Fitting, Cock, Drain	1
8	100030	Bushing; 1/8-27 npt(f) x 1/4-18 npt(m)	1
9	112538	Fitting, Elbow, Street; 90 Degree	1
10	176347	Label, Identification	1
11	110475	Fitting, Tee, Street	1
12	171976	Tube, 13 inches; Model 265C536	1
	171975	Tube, 18 inches; Model 265C537	1
	171974	Tube, 29 inches; Model 265C538	1
14	156849	Pipe, Nipple	1
15	171988	Gasket	1
16	110756	Elbow, Street; 90 Degree	1
17	208390	Valve, Ball 3/8-18 npsm(m) x 3/8-18 npt (m)	1
18	237533	Valve, Ball; 316 Stainless Steel 3/8-18 npsm(m) x 3/8-18 npt (m)	1
20	210575	Cap, Filler	1
21	159239	Fitting, Nipple, Pipe Reducing	1

Ref No.	Part No.	Description	Qty
23▲	175078	Label, Warning	1
25	104813	Plug, Pipe	1
27	236087	Tank Assembly, Pressure; 5 Gallon, Model 25C536; includes gasket 117571	1
	236088	Tank Assembly, Pressure; 10 Gallon, Model 25C537; includes gasket 117571	1
	236089	Tank Assembly, Pressure; 15 Gallon, Model 25C538; includes gasket 117571	1
27a	— —	C-clamps. Replace individual C-clamps with **C-clamp Replacement Kit 111381**, page 23	6
29	15D059	Liner, Tank; 5 Gallon, Model 25C536; qty of 20 (not shown)	1
	15D060	Liner, Tank; 10 Gallon, Model 25C537; qty of 20 (not shown)	1
	15D061	Liner, Tank; 15 Gallon, Model 25C538; qty of 8 (not shown)	1
30	160430	Gauge, Pressure, Air	1
31	171937	Regulator, Air	1
32	155665	Union, Adapter	1
60	222011	Clamp, Grounding	1
80▲	17P806	Safety Tag (not shown)	1

▲ Replacement safety labels, signs, tags, and cards are available at no cost.

Accessories

Low-Pressure Regulator Conversion Kit 235041

15 psi (0.1 MPa, 1 bar) Maximum Working Pressure.

0 to 15 psi (0 to 0.1 MPa, 0 to 1 bar) regulated pressure range

To convert to a low-pressure regulator assembly

High-Pressure Regulator Conversion Kit 236680

100 psi (0.7 MPa, 7 bar) Maximum Working Pressure.
0 to 100 psi (0 to 0.7 MPa, 0 to 7 bar) regulated pressure range

To convert to a high-pressure regulator assembly

Air Regulator and Filter 202660

100 psi (0.7 MPa, 7 bar) Maximum Working Pressure

For air regulation and filtration

Gun Air Regulator Kit 235042

100 psi (0.7 MPa, 7 bar) Working Pressure

To supply atomizing air to a spray gun from the pressure pot

PTFE Coated Gasket 117574

Optional replacement for standard 117571 gasket.

Nylon Fluid Supply Hose

300 psi (2.1 MPa, 21 bar) Maximum Working Pressure

3/8” ID; cpld 3/8 npsm(fbe) swivel; neoprene cover

- **205160** 15 ft (4.6 m) long
- **205142** 25 ft (7.6 m) long
- **205143** 50 ft (15.2 m) long

Bottom Outlet Kit 236677

For bottom outlet fluid feeding

Heavy Duty Agitator

To convert to a heavy duty agitator assembly. Recommended for fluid viscosities over 1000 cP.

- **236661** 5-gallon tank size
- **236662** 10-gallon tank size
- **236663** 15-gallon tank size

C-clamp Replacement Kit 111381

Use to replace an individual pressure tank C-clamp assembly (27a). The kit includes one each of T-handle, C-clamp, pin, and cotter pin. See **Tank Parts for Models 25C536, 25C537, 25C538**, page 21.

Antistatic Polyethylene Tank Liners

Liners fit inside the tank. For ease of cleanup and maintenance.

- **15D059** 5-gallon tank size (Quantity of 20)
- **15D060** 10-gallon tank size (Quantity of 20)
- **15D061** 15-gallon tank size (Quantity of 8)

Stainless Steel Agitator Paddle 186517

Material of 304 stainless steel welded construction. Replaces plastic agitator paddle 236098.

DataTrak Kit 25P394

Use the DataTrak Kit 25P394 for monitoring speed and totalizing revolutions of radial piston motor driven agitators.

Air Consumption

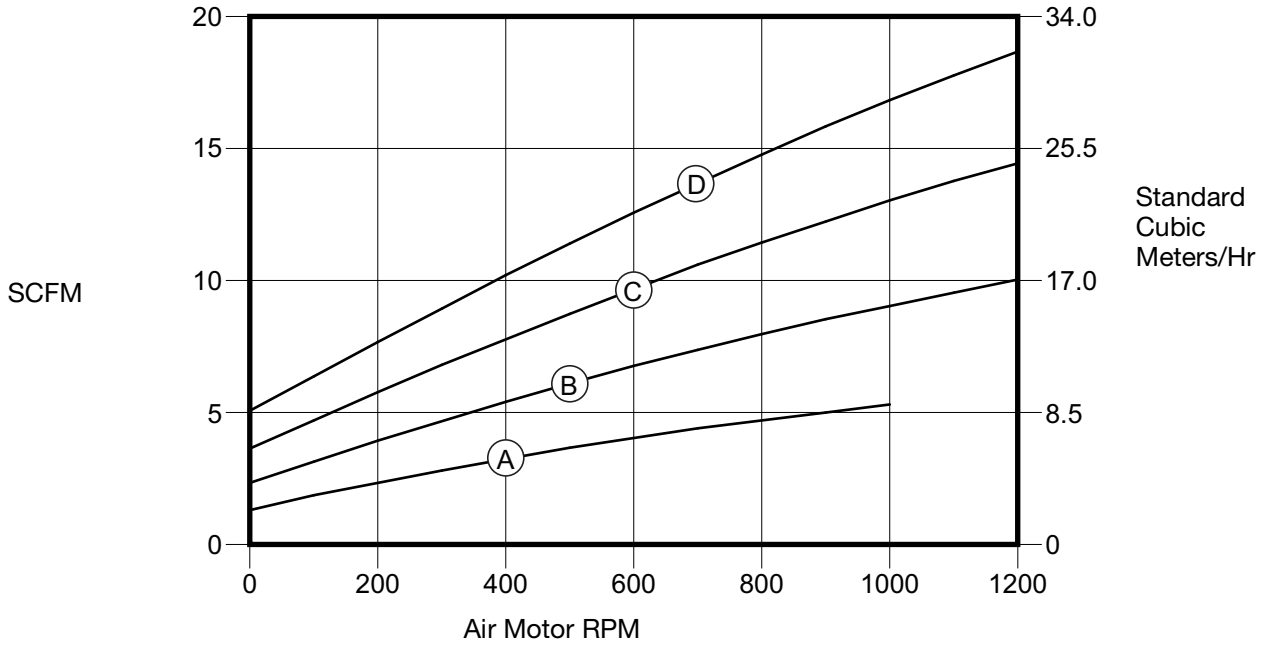

FIG. 11

A — 20 psi (1.4 bar, 0.14 MPa)

B — 40 psi (2.8 bar, 0.28 MPa)

C — 60 psi (4.1 bar, 0.41 MPa)

D — 80 psi (5.5 bar, 0.55 MPa)

Dimensions

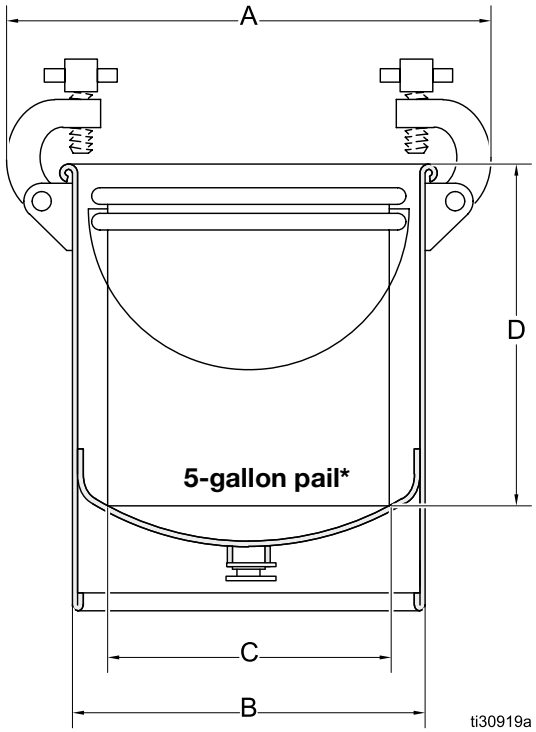

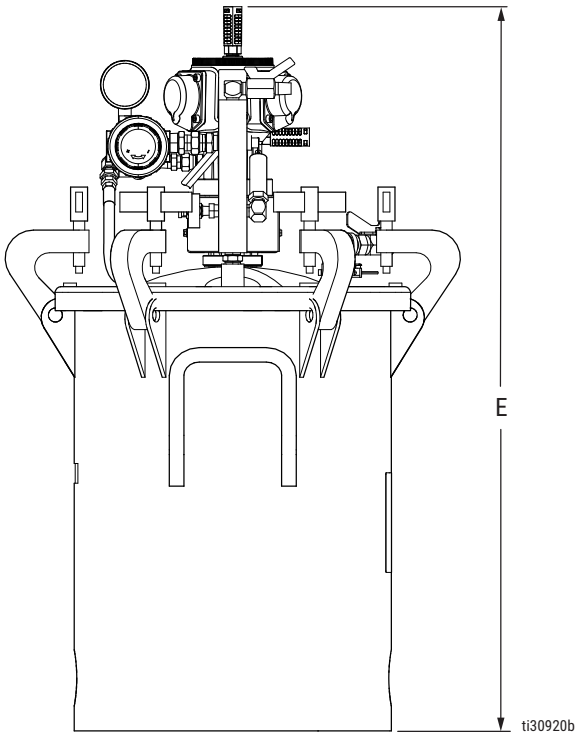

Reference	Dimension	Reference	Dimension
A	19 in. (483 mm)	D	5 gallons: 13.2 in. (335 mm) 10 gallons: 18.2 in. (462 mm) 15 gallons: 28.9 in. (735 mm)
B	14 in. (356 mm)	E	5 gallons: 30.5 in. (775 mm) 10 gallons: 33.9 in. (860 mm) 15 gallons: 44.6 in. (1132 mm)
C	12.6 in (320.5 mm)		

* Putting a 5 gallon pail of fluid is not recommended in 10 and 15 gallon tanks. It may require modification of the suction tube to allow clearance between the suction tube and the pail.

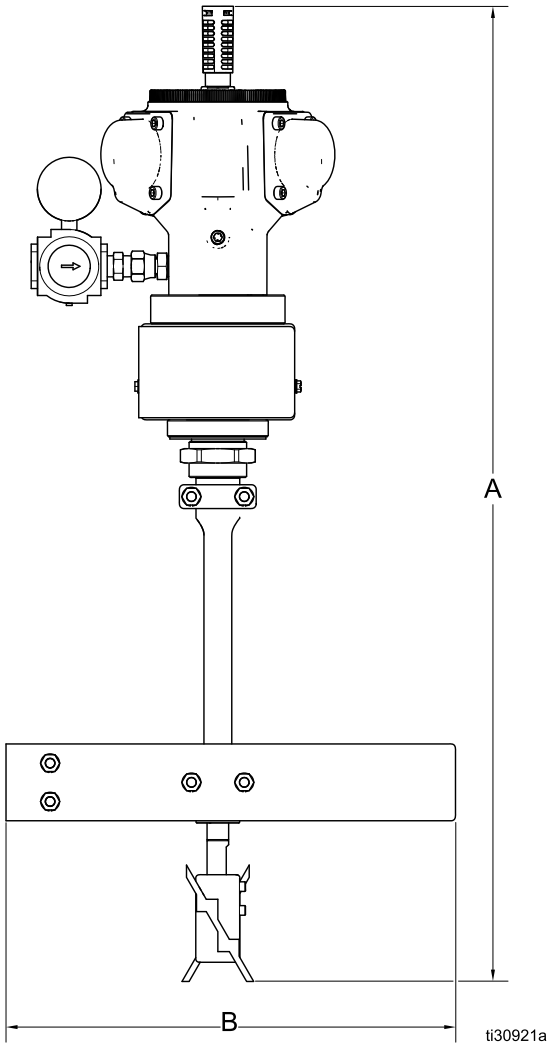

Reference	Dimension	Reference	Dimension
A	25C539: 25.5 in. (648 mm) 25C540 31.3 in. (794 mm) 25C541 41.5 in. (1054 mm)	B	11.7 in. (297 mm)

Technical Specifications

Actual tank capacities	
5-gallon	8.8 gallons (33 liters)
10-gallon	12.6 gallons (48 liters)
15-gallon	19.3 gallons (72 liters)
Tank inlet/outlet sizes	
Air inlet size	1/4–18 npt (m)
Fluid outlet size	3/8–18 npsm (m)
Bottom outlet size	3/4–14 npt (f)
Wetted parts	304 and 316 stainless steel, PTFE, nylon, and bronze. Splashed materials: LDPE, Chloroprene, Santoprene
Weight	
25C536	66 lbs (30 kg)
25C537	77 lbs (35 kg)
25C538	93 lbs (42 kg)
25C539	13 lbs (5.9 kg)
25C540	14 lbs (6.4 kg)
25C541	15 lbs (6.8 kg)
Maximum working pressure, high pressure regulated tank	100 psig (0.7 MPa, 7 bar)
Maximum recommended operating pressure, agitator	70 psig (0.5 MPa, 5 bar)
Tank relief valve setting	100 psi (0.7 MPa, 7 bar)
Maximum allowable process fluid temperature	158° F (70° C)
Recommended agitator speed range for adequate agitation	40–60 rpm
Recommended maximum agitator speed (higher speeds may over-agitate the material and decrease shaft seal life)	60 rpm
Recommended maximum material viscosity	1000 cP
Sound pressure level at 70 psig, maximum recommended speed	Less than 75 dBA
Note: *Santoprene® is a registered trademark of the Monsanto Co.*	

California Proposition 65

CALIFORNIA RESIDENTS

⚠ **WARNING:** Cancer and reproductive harm – www.P65warnings.ca.gov.

Graco Standard Warranty

Graco warrants all equipment referenced in this document which is manufactured by Graco and bearing its name to be free from defects in material and workmanship on the date of sale to the original purchaser for use. With the exception of any special, extended, or limited warranty published by Graco, Graco will, for a period of twelve months from the date of sale, repair or replace any part of the equipment determined by Graco to be defective. This warranty applies only when the equipment is installed, operated and maintained in accordance with Graco's written recommendations.

This warranty does not cover, and Graco shall not be liable for general wear and tear, or any malfunction, damage or wear caused by faulty installation, misapplication, abrasion, corrosion, inadequate or improper maintenance, negligence, accident, tampering, or substitution of non-Graco component parts. Nor shall Graco be liable for malfunction, damage or wear caused by the incompatibility of Graco equipment with structures, accessories, equipment or materials not supplied by Graco, or the improper design, manufacture, installation, operation or maintenance of structures, accessories, equipment or materials not supplied by Graco.

This warranty is conditioned upon the prepaid return of the equipment claimed to be defective to an authorized Graco distributor for verification of the claimed defect. If the claimed defect is verified, Graco will repair or replace free of charge any defective parts. The equipment will be returned to the original purchaser transportation prepaid. If inspection of the equipment does not disclose any defect in material or workmanship, repairs will be made at a reasonable charge, which charges may include the costs of parts, labor, and transportation.

THIS WARRANTY IS EXCLUSIVE, AND IS IN LIEU OF ANY OTHER WARRANTIES, EXPRESS OR IMPLIED, INCLUDING BUT NOT LIMITED TO WARRANTY OF MERCHANTABILITY OR WARRANTY OF FITNESS FOR A PARTICULAR PURPOSE.

Graco's sole obligation and buyer's sole remedy for any breach of warranty shall be as set forth above. The buyer agrees that no other remedy (including, but not limited to, incidental or consequential damages for lost profits, lost sales, injury to person or property, or any other incidental or consequential loss) shall be available. Any action for breach of warranty must be brought within two (2) years of the date of sale.

GRACO MAKES NO WARRANTY, AND DISCLAIMS ALL IMPLIED WARRANTIES OF MERCHANTABILITY AND FITNESS FOR A PARTICULAR PURPOSE, IN CONNECTION WITH ACCESSORIES, EQUIPMENT, MATERIALS OR COMPONENTS SOLD BUT NOT MANUFACTURED BY GRACO. These items sold, but not manufactured by Graco (such as electric motors, switches, hose, etc.), are subject to the warranty, if any, of their manufacturer. Graco will provide purchaser with reasonable assistance in making any claim for breach of these warranties.

In no event will Graco be liable for indirect, incidental, special or consequential damages resulting from Graco supplying equipment hereunder, or the furnishing, performance, or use of any products or other goods sold hereto, whether due to a breach of contract, breach of warranty, the negligence of Graco, or otherwise.

FOR GRACO CANADA CUSTOMERS
The Parties acknowledge that they have required that the present document, as well as all documents, notices and legal proceedings entered into, given or instituted pursuant hereto or relating directly or indirectly hereto, be drawn up in English. Les parties reconnaissent avoir convenu que la rédaction du présente document sera en Anglais, ainsi que tous documents, avis et procédures judiciaires exécutés, donnés ou intentés, à la suite de ou en rapport, directement ou indirectement, avec les procédures concernées.

Graco Information

For the latest information about Graco products, visit www.graco.com.
For patent information, see www.graco.com/patents.
TO PLACE AN ORDER, contact your Graco distributor or call to identify the nearest distributor.

Toll Free Phone Number: 1-800-328-0211

All written and visual data contained in this document reflects the latest product information available at the time of publication. Graco reserves the right to make changes at any time without notice.

Original instructions. This manual contains English. MM 3A4797
Graco Headquarters: Minneapolis
International Offices: Belgium, China, Japan, Korea

GRACO INC. AND SUBSIDIARIES • P.O. BOX 1441 • MINNEAPOLIS MN 55440-1441 • USA
Copyright 2023, Graco Inc. All Graco manufacturing locations are registered to ISO 9001.

www.graco.com
Revision K, October 2026