Repair/Parts

Sealed 4-Ball Lowers

333022P

EN

750cc, 1000cc, 1500cc, and 2000cc Models

Designed for low-pressure, high-volume circulation of finishing materials. Do not use for flushing or purging lines with caustics, acids, abrasive line strippers, or other similar fluids. For professional use only.

Important Safety Instructions

Read all warnings and instructions in this manual and in your separate pump manual before using the equipment. Save these instructions.

*See **Technical Specifications** for information on Maximum Fluid Working Pressure.*

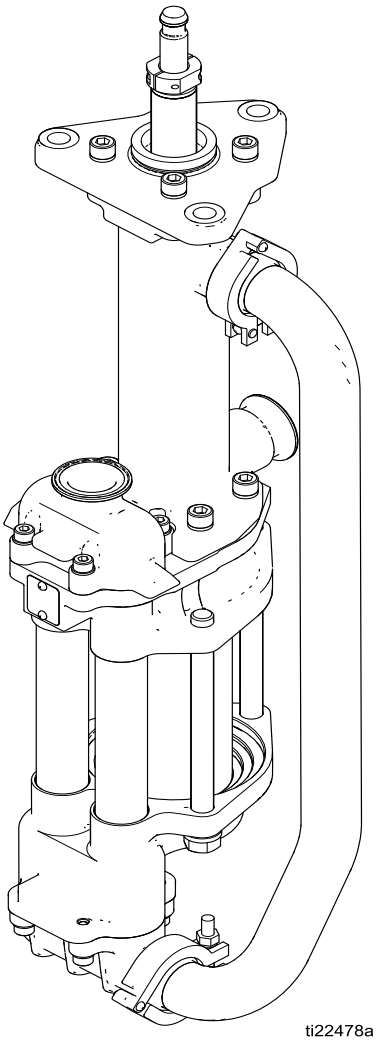

PROVEN QUALITY. LEADING TECHNOLOGY.

Contents

Related Manuals 2
Models 3
Options When Ordering the Lower 3
Flush Before Using Equipment 3
Warnings 4
Repair 6
Full Lower Disassembly 6
Preparation for Disassembly 6
Remove Outlet Checks and Side Manifold 6
Disassemble the Bellows Section 6
Disassemble the Fluid Section 7
Disassemble the Top Plate 8
Disassemble the Bellows Assembly 8
Disassemble the Throat Cartridge 8
Disassemble the Piston Assembly 8
Clean All Parts 8
Full Lower Reassembly 9
Reassemble the Top Plate 9
Reassemble the Bellows Assembly 9
Reassemble the Throat Cartridge 10
Reassemble the Piston Assembly 10
Reassemble the Fluid Section 11
Reassemble the Bellows Section 14
Install the Top Plate and Side Manifold 14
Replace the Bellows 15
Parts 17
750cc Sealed 4-Ball Lowers 17
1000cc, 1500cc, 2000cc Sealed 4-Ball Lowers 19
Connection Kits 21
Repair Kits 22
California Proposition 65 22
Dimensions 23
Technical Specifications 24
Graco Standard Warranty 26
Graco Information 26

Related Manuals

Manual in English	Description
3A3381	Viscount® 4-Ball Pumps
3A3382	High-Flo® 4-Ball Pumps
3A3383	President® 4-Ball Pumps
3A7828	E-Flo® DCi Sealed 4-Ball Pumps
3A3384	E-Flo® DC 4-Ball Pumps
3A3453	E-Flo® DC 2000, 3000, and 4000 Circulation Pumps
311592	E-Flo® 4-Ball Pumps, Installation
3A3385	E-Flo® 4-Ball Pumps, Operation
3A3386	E-Flo® 4-Ball Pumps, Repair/Parts

Models

See **Technical Specifications** on page 24 for maximum working pressures.

Model Description	Sizes				
	750cc Lowers	750cc HP Lowers	1000cc Lowers	1500cc Lowers	2000cc Lowers
Ultralife Cylinders					
Standard Top Plate Rotation*	17K656	26B217	17K657	17K658	17K659
90° Top Plate Rotation*	25N424	N/A	25N425	25N426	25N427
180° Top plate Rotation*	25N416	N/A	25N417	25N418	25N419
Ultralife Cylinders with Silicon Nitride Balls					
Standard Top Plate Rotation*	25R338	N/A	25R339	25R340	25R341
Chrome Cylinders					
Standard Top Plate Rotation*	25N400	26B218	25N404	25N408	25N410
90° Top Plate Rotation*	N/A				
180° Top plate Rotation*					

* See **Dimensions**, page 23, for top plate rotation orientations.

Options When Ordering the Lower

Cylinder/rod coating options include Ultralife and Chrome:

- Choose Ultralife for most applications.
- Choose Chrome for fine pigment paint and fluids with low lubrication such as solvents and water.
- Choose silicon nitride check balls when pumping highly shear sensitive materials.

Flush Before Using Equipment

The pump lower was tested with lightweight oil, which is left in the fluid passages to protect parts. To avoid contaminating pumped material with oil, flush with a compatible solvent before putting the pump into service.

Warnings

The following warnings are for the setup, use, grounding, maintenance, and repair of this equipment. The exclamation point symbol alerts you to a general warning and the hazard symbols refer to procedure-specific risks. When these symbols appear in the body of this manual or on warning labels, refer back to these Warnings. Product-specific hazard symbols and warnings not covered in this section may appear throughout the body of this manual where applicable.

⚠WARNING

FIRE AND EXPLOSION HAZARD

Flammable fumes, such as solvent and paint fumes, in **work area** can ignite or explode. Paint or solvent flowing through the equipment can cause static sparking. To help prevent fire and explosion:

- Use equipment only in well ventilated area.
- Eliminate all ignition sources; such as pilot lights, cigarettes, portable electric lamps, and plastic drop cloths (potential static sparking).
- Ground all equipment in the work area. See **Grounding** instructions.
- Never spray or flush solvent at high pressure.
- Keep work area free of debris, including solvent, rags and gasoline.
- Do not plug or unplug power cords, or turn power or light switches on or off when flammable fumes are present.
- Use only grounded hoses.
- Hold gun firmly to side of grounded pail when triggering into pail. Do not use pail liners unless they are anti-static or conductive.
- **Stop operation immediately** if static sparking occurs or you feel a shock**.** Do not use equipment until you identify and correct the problem.
- Keep a working fire extinguisher in the work area.

PRESSURIZED EQUIPMENT HAZARD

Fluid from the equipment, leaks, or ruptured components can splash in the eyes or on skin and cause serious injury.

- Follow the **Pressure Relief Procedure** when you stop spraying/dispensing and before cleaning, checking, or servicing equipment.
- Tighten all fluid connections before operating the equipment.
- Check hoses, tubes, and couplings daily. Replace worn or damaged parts immediately.

⚠WARNING

EQUIPMENT MISUSE HAZARD

Misuse can cause death or serious injury.

- Do not operate the unit when fatigued or under the influence of drugs or alcohol.
- Do not exceed the maximum working pressure or temperature rating of the lowest rated system component. See **Technical Data** in all equipment manuals.
- Use fluids and solvents that are compatible with equipment wetted parts. See **Technical Data** in all equipment manuals. Read fluid and solvent manufacturer's warnings. For complete information about your material, request Safety Data Sheet (SDS) from distributor or retailer.
- Turn off all equipment and follow the **Pressure Relief Procedure** when equipment is not in use.
- Check equipment daily. Repair or replace worn or damaged parts immediately with genuine manufacturer's replacement parts only.
- Do not alter or modify equipment. Alterations or modifications may void agency approvals and create safety hazards.
- Make sure all equipment is rated and approved for the environment in which you are using it.
- Use equipment only for its intended purpose. Call your distributor for information.
- Route hoses and cables away from traffic areas, sharp edges, moving parts, and hot surfaces.
- Do not kink or over bend hoses or use hoses to pull equipment.
- Keep children and animals away from work area.
- Comply with all applicable safety regulations.

MOVING PARTS HAZARD

Moving parts can pinch, cut or amputate fingers and other body parts.

- Keep clear of moving parts.
- Do not operate equipment with protective guards or covers removed.
- Pressurized equipment can start without warning. Before checking, moving, or servicing equipment, follow the **Pressure Relief Procedure** and disconnect all power sources.

TOXIC FLUID OR FUMES HAZARD

Toxic fluids or fumes can cause serious injury or death if splashed in the eyes or on skin, inhaled, or swallowed.

- Read Safety Data Sheet (SDS) to know the specific hazards of the fluids you are using.
- Store hazardous fluid in approved containers, and dispose of it according to applicable guidelines.

PERSONAL PROTECTIVE EQUIPMENT

Wear appropriate protective equipment when in the work area to help prevent serious injury, including eye injury, hearing loss, inhalation of toxic fumes, and burns. Protective equipment includes but is not limited to:

- Protective eyewear, and hearing protection.
- Respirators, protective clothing, and gloves as recommended by the fluid and solvent manufacturer.

Repair

Full Lower Disassembly

NOTE: Lip Seal Kit 17K753 is available. Kit parts are marked with a dagger (†).

NOTE: Piston Seal Kits are available for each lower size. Kits are available for several seal materials. Kit parts are marked with a diamond (u).

NOTE: Complete Pump Repair Kits also are available for each lower size. Kit parts are marked with an asterisk (*).

See **Repair Kits**, page 22, for a complete list of available repair kits.

If you want to replace the bellows without a full pump disassembly, see page 15.

Preparation for Disassembly

1. Flush the pump, if possible.

2. Stop the pump at the bottom of its stroke.
3. Relieve the pressure. See your separate pump manual.
4. Remove the lower from the motor as described in your separate pump manual.

NOTE: See **Parts**, page 17, for an exploded view of the entire lower.

Remove Outlet Checks and Side Manifold

See FIG. 11, page 13, for an exploded view of the parts.

1. Secure the inlet check manifold (18) in a vise.
2. Remove the four capscrews (9) and washers (8) from around the outlet check manifold (41).
3. Remove the outlet check manifold (41), balls (23), seats (24), and gaskets (7).

NOTICE

Be careful not to drop or damage the balls (23) or seats (24). A damaged ball or seat cannot seal properly and the pump will leak.

4. With a waste container in place, remove the bottom sanitary clamp (50) and gasket (58) from the side manifold (49) at the inlet check manifold (18). Allow the fluid to drain from the side manifold (49).
5. Remove the side manifold (49) by removing the upper sanitary clamp (50) and gasket (58) from the bellows chamber (45). See FIG. 13, page 14.

Disassemble the Bellows Section

See FIG. 13, page 14.

1. Remove the retaining collar (60) by removing the screws (63).
2. Remove the four capscrews (40) and washers (46) from the top plate (29).
3. Carefully lift the top plate (29) off of the bellows chamber (45). Keep the top plate (29) level.

NOTE: See FIG. 3, page 9. The retaining ring (54), retaining washer (56), bearing housing (48), bearing (25) and backup seal (51) nest in the top plate and will slide off with the top plate (29).

4. If the bellows has failed, also remove the breather valve (26) from the top plate. Clean the fluid path of any clogged paint.

NOTICE

If the bellows has failed, the breather valve (26) must be replaced and the fluid path cleared of clogged paint. Purchase and install Part 17J564. The breather valve keeps the bellows pressure low and prevents fluid escape if the bellows fail. Clogged paint will cause the valve not to work.

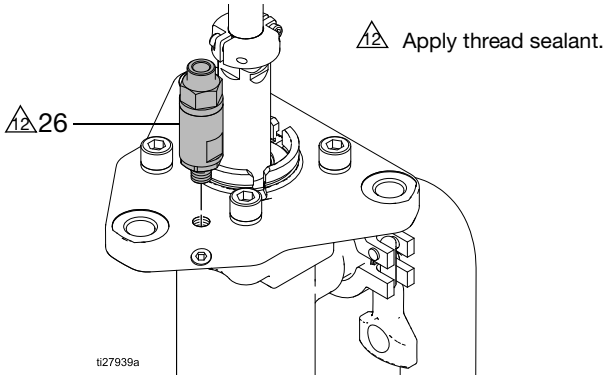

FIG. 1. Breather Valve

5. Remove the bellows o-ring (55).

6. Remove the bellows assembly from the bellows chamber (45).

NOTE: The bellows assembly includes the bellows nut (59), the bellows (53), o-rings (57 and 61), and the bellows sleeve (34). To disassemble, see instructions on page 8 and FIG. 4 on page 9.

7. Remove the four capscrews (40) from around the base of the bellows chamber (45). Lift the bellows chamber straight up off the fluid outlet housing (16). Be careful not to damage the piston rod (17).

Disassemble the Fluid Section

See FIG. 11, page 13, for an exploded view of the parts.

1. Remove the throat cartridge (19).

2. Remove the three screws (13) and lock washers (14). Lift off the fluid outlet housing (16).

NOTE: The fluid tubes (3), cylinder (1), and piston assembly may come loose with the fluid outlet housing (16), or may remain in place on the fluid inlet housing (15).

3. Remove the fluid tubes (3) and cylinder (1). Pull the piston assembly out of the cylinder (1). Inspect the surface of the piston rod (17) and the inside surfaces of the cylinder (1) and fluid tubes (3). If any of these parts are scratched or damaged, replace them.

4. Remove two o-rings (2) from the fluid inlet housing (15), where the fluid tubes (3) sit. Remove o-rings (2) from the grooves at each end of the fluid tubes (3).

5. Release the inlet check manifold (18) from the vise.

6. Remove the four capscrews (9) and washers (8) from the inlet check manifold (18).

7. Remove the balls (5), inlet seats (6 and 33), and gaskets (7).

NOTICE

Be careful not to drop or damage the balls (5) or seats (6 and 33). A damaged ball or seat cannot seal properly and the pump will leak.

8. Inspect the pressure relief valve in the seat (6) to make sure it is not clogged. Press down on the valve's ball to see if the ball and the spring are free to move.

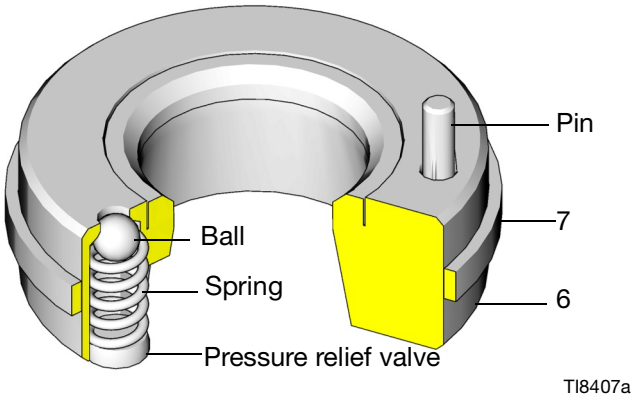

FIG. 2. Inlet Seat with Pressure Relief Valve

NOTICE

If the pressure relief valve in the seat (6) is clogged or filled with material, the pump may overpressurize, causing leakage. To clear, soak the seat in a compatible solvent. Make sure all material residue is cleaned from the ball and seat area. If the relief valve cannot be thoroughly cleaned so that the ball and spring are free to move, replace the seat (6).

Disassemble the Top Plate

See FIG. 3, page 9.

Carefully remove the retaining ring (54), retaining washer (56), bearing housing (48), bearing (25) and backup seal (51) from the top plate (29).

Disassemble the Bellows Assembly

See FIG. 4, page 9.

1. Clamp the flats of the bellows sleeve (34) in a vise.
2. Use a wrench on the flats of the bellows nut (59) to remove it from the bellows sleeve.
3. Remove o-rings (57 and 61) from inside of the bellows sleeve (34).
4. Work the bellows (53) up and off the bellows sleeve (34).

Disassemble the Throat Cartridge

See FIG. 5, page 10.

To disassemble the throat cartridge, remove the throat nut (22), o-ring (35), lip seal (21) and 2 ea. o-rings (20).

Disassemble the Piston Assembly

See FIG. 6, page 10 or FIG. 7, page 11.

Place the flats of the piston nut (12) in a vise. Unscrew the rod (17) from the piston nut (12). Remove the piston (10), seal (11u*) and spacer (44, not used on 750 cc models).

Clean All Parts

Clean all parts in a compatible solvent. Inspect all parts for wear or damage. If you are using a repair kit, use all the new parts in the kit, discarding the old ones they replace. Replace any other parts as needed. Worn or damaged parts may cause the pump to perform poorly or cause premature wear of the new seals and packings.

Full Lower Reassembly

Reassemble the Top Plate

1. Apply lubricant to the backup seal (51*‡).
2. Install the backup seal (51*‡). Be sure the seal seats completely. Use a press if needed.
3. Install the bearing housing (48), bearing (25‡), retaining washer (56), and the retaining ring (54) into the top plate (29).

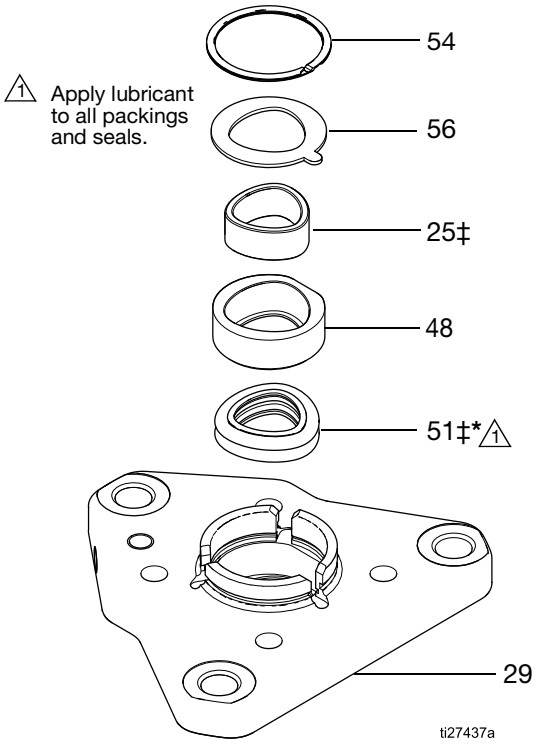

FIG. 3. Top Plate Assembly

Reassemble the Bellows Assembly

1. Lubricate and install o-ring (57*‡).
2. Slide the new bellows (53*‡) onto the bellows sleeve (34) and snap it into place.
3. Clamp the flats of the bellows sleeve (34) in a vise.
4. Lubricate and install o-ring (61*‡).
5. Apply removable (blue) Loctite 243 to the inner diameter of the bellows nut (59).
6. Install the bellows nut (59) and torque to 25-30 ft-lb (34-41 N•m).
7. Lubricate and install the bellows o-ring (55*‡).

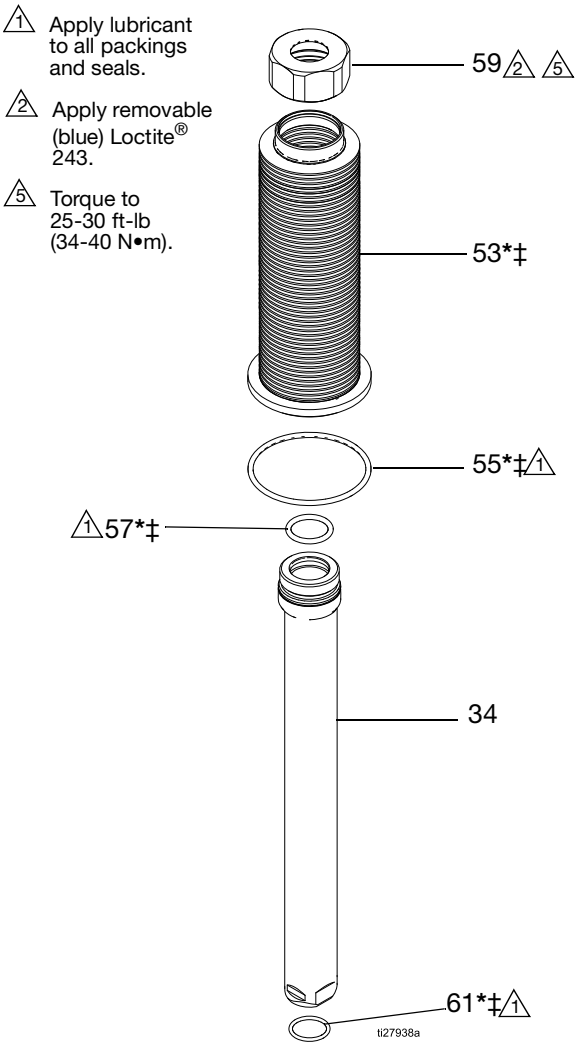

FIG. 4. Disassemble or Assemble the Bellows

Reassemble the Throat Cartridge

1. Apply lubricant to the o-rings (20†*). Install one o-ring (20†*) into the throat cartridge (19). Install the lip seal (21†*). Install one o-ring (20†*). Apply thread lubricant to the outside threads of the throat nut (22) and thread it into the cartridge (19). Hand tighten in place.

2. Apply lubricant to the o-ring (35*). Slide the o-ring (35*) onto the outside edge of the throat cartridge (19) until the o-ring (35*) seats in the groove.

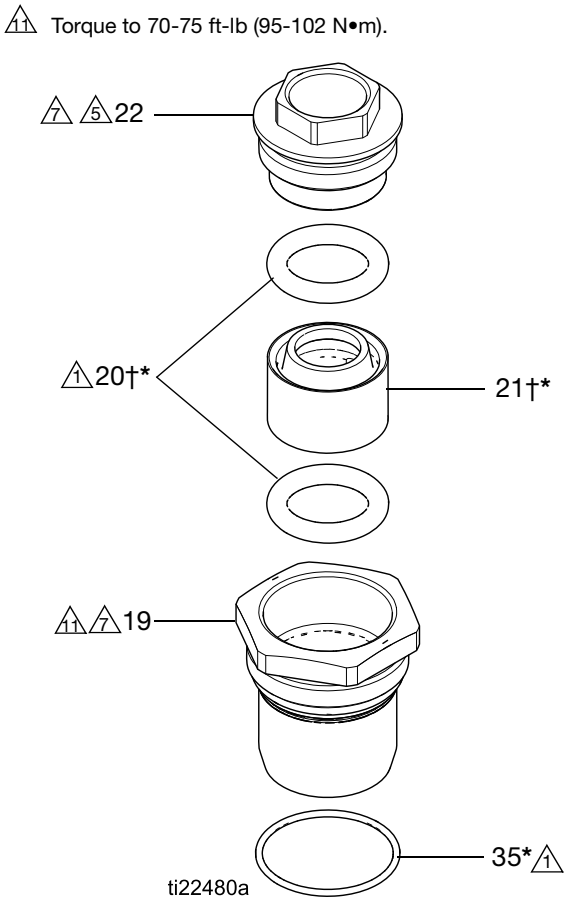

FIG. 5. Disassemble or Assemble the Throat Cartridge

Reassemble the Piston Assembly

1. 1000cc, 1500cc, and 2000cc models only: Place the halves of the piston (10) around the piston seal (11u*) and snap them together. See FIG. 6.

   or

   750cc and 750cc HP models only: Place piston seal (11u*) onto piston (10). See FIG. 7 on page 11.

2. Apply high strength (red) Loctite® 263 or 2760 to the inner diameter threads on the piston nut (12). Screw the rod (17) through the piston (10) and spacer (44; not used on 750cc models) into the piston nut (12). Torque the piston nut (12) to 120-125 ft-lb (163-169 N•m). Sealant must be allowed to cure for a minimum of 12 hours before use.

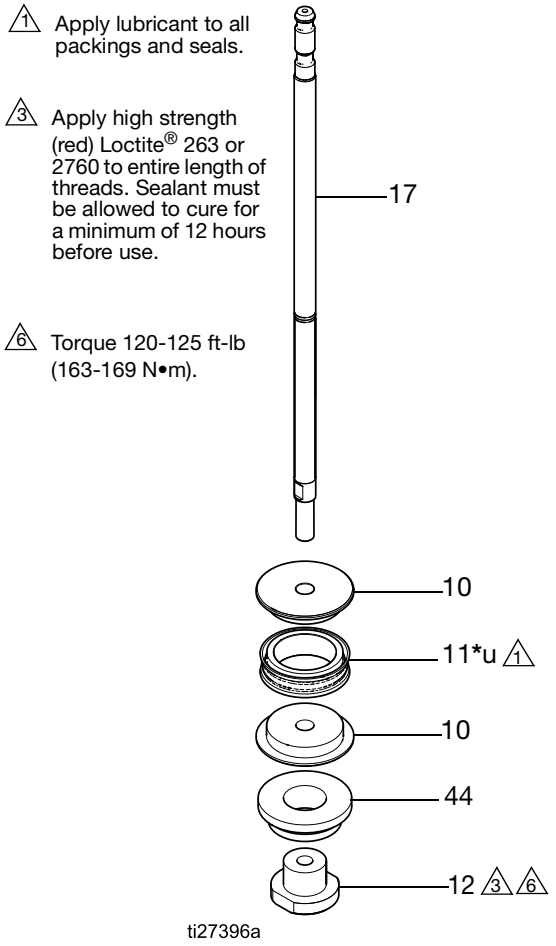

FIG. 6. Disassemble or Assemble the Piston (1000cc, 1500cc, and 2000cc models only)

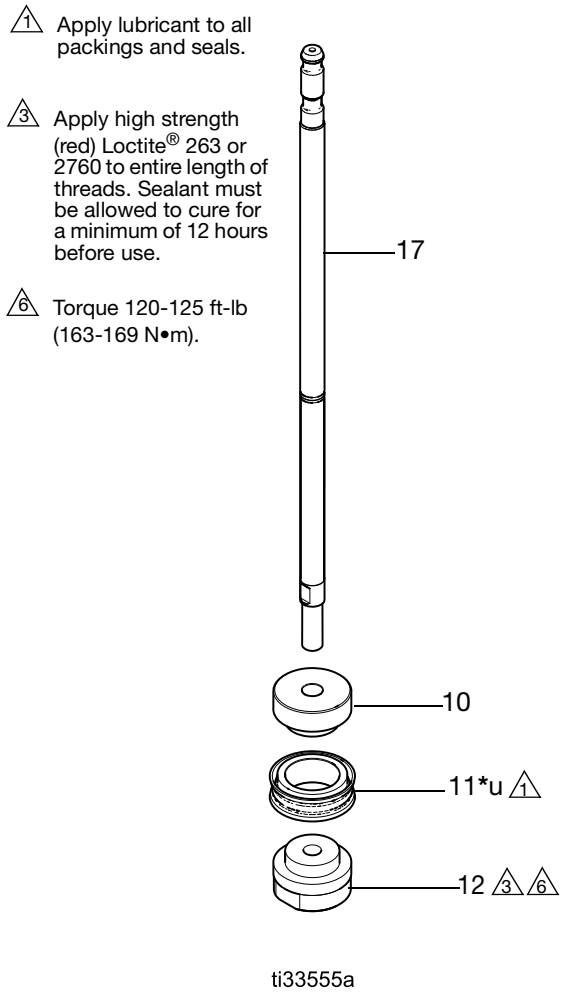

FIG. 7. Disassemble or Assemble the Piston (750cc model only)

Reassemble the Fluid Section

See FIG. 11, page 13.

1. With the fluid inlet housing (15) turned upside down, install the balls (5H) and the gaskets (7Hvu*).

COMPONENT RUPTURE HAZARD

The relief valve seat (6H) must be installed in the left side of the inlet fluid housing (15), as viewed in FIG. 11. The relief valve reduces the risk of pump over-pressurization. The seat cannot relieve pressure if installed on the other side of the fluid inlet housing (15).

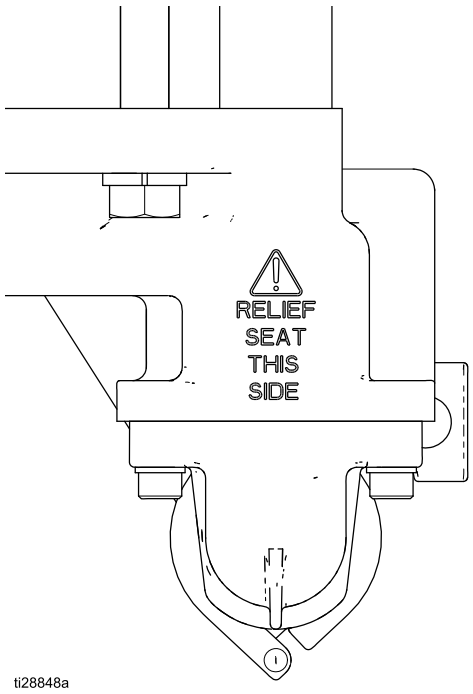

FIG. 8. Placement of Inlet Seat with Relief Valve

2. Use the **text cast into the inlet fluid housing** (15) as a guide to install the relief valve inlet seat (6H) The pin (See FIG. 2) on the seat must point into the inlet fluid housing (15). This pin limits the positioning of the seat (6H), ensuring that the vent hole is not blocked by part of the housing.

3. Install the inlet seat (33H) without a relief valve in the right side of the inlet fluid housing (15).

NOTE: The inlet seats (6H and 33H) are not reversible; the chamfered side must face the ball.

4. Place the inlet check manifold (18) on the inlet fluid housing (15). Apply removable (blue) Loctite® 243 to entire length of the capscrew (9) threads. Install the washers (8) and cap screws (9), and torque to 25-30 ft-lb (34-40 N•m).

5. Place the inlet check manifold (18) in a vise. Place one o-ring (2u*) in each side of the inlet fluid housing (15), where the fluid tubes (3) sit. Place o-rings (2u*) in the grooves at each end of the fluid tubes (3). Place a cylinder gasket (4u*) in both the inlet and outlet fluid housings (15 and 16). Position the fluid tubes and cylinder (1) in the fluid inlet housing (15).

NOTE: It may be necessary to use a rubber mallet to set the fluid tubes (3) in place.

6. Lubricate the inside of the cylinder (1). Slide the piston assembly into the cylinder (1). Rotate the piston assembly as shown in FIG. 9.

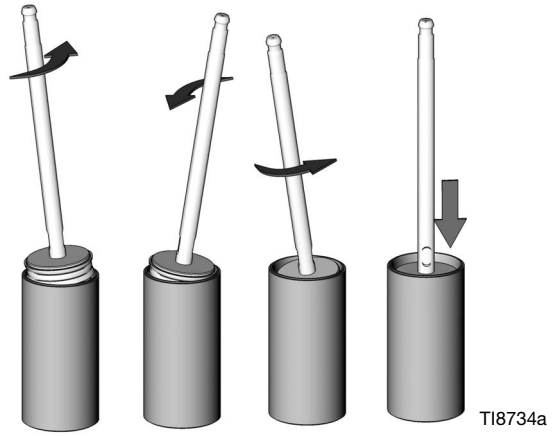

FIG. 9. Install Piston in Cylinder

7. Apply thread lubricant to the outside threads on the throat cartridge (19) and loosely thread the assembled cartridge into the fluid outlet housing (16).

8. Torque the throat cartridge (19) to 70-75 ft-lb (95-102 N•m).

9. Install the fluid outlet housing (16) over the piston rod (17) and onto the fluid tubes (3) and cylinder (1). It may not seat well at first. Apply thread lubricant and install the bolts (13) and lock washers (14) from the fluid inlet housing (15). Tighten two screws (A, see figure) into the fluid outlet housing (16). They will draw the housings firmly onto the tubes and cylinders. When fully seated, tighten the third screw (B, see figure). Torque all three screws to 35-40 ft-lb (47-54 N•m).

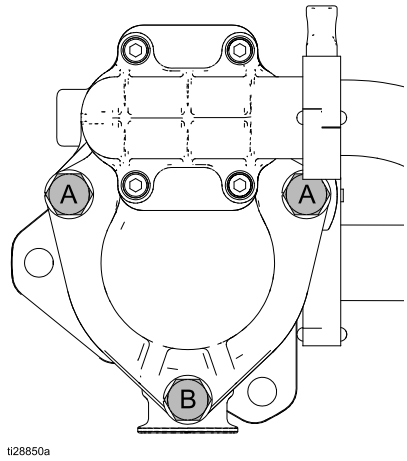

FIG. 10. Tightening Sequence

10. Torque the throat nut (22) to 25-30 ft-lb (34-40 N•m).

11. Place a ball (23v), seat (24v) and gasket (7Hvu*) in each side of the outlet check manifold (41). Install the outlet check manifold (41) on the fluid outlet housing (16).

NOTE: The outlet seats (24v) are not reversible. The chamfered side must face the ball. See FIG. 11.

12. Apply removable (blue) Loctite® 243 to entire length of the capscrew (9) threads. Install the washers (8) and capscrews (9), and torque to 25-30 ft-lb (34-40 N•m).

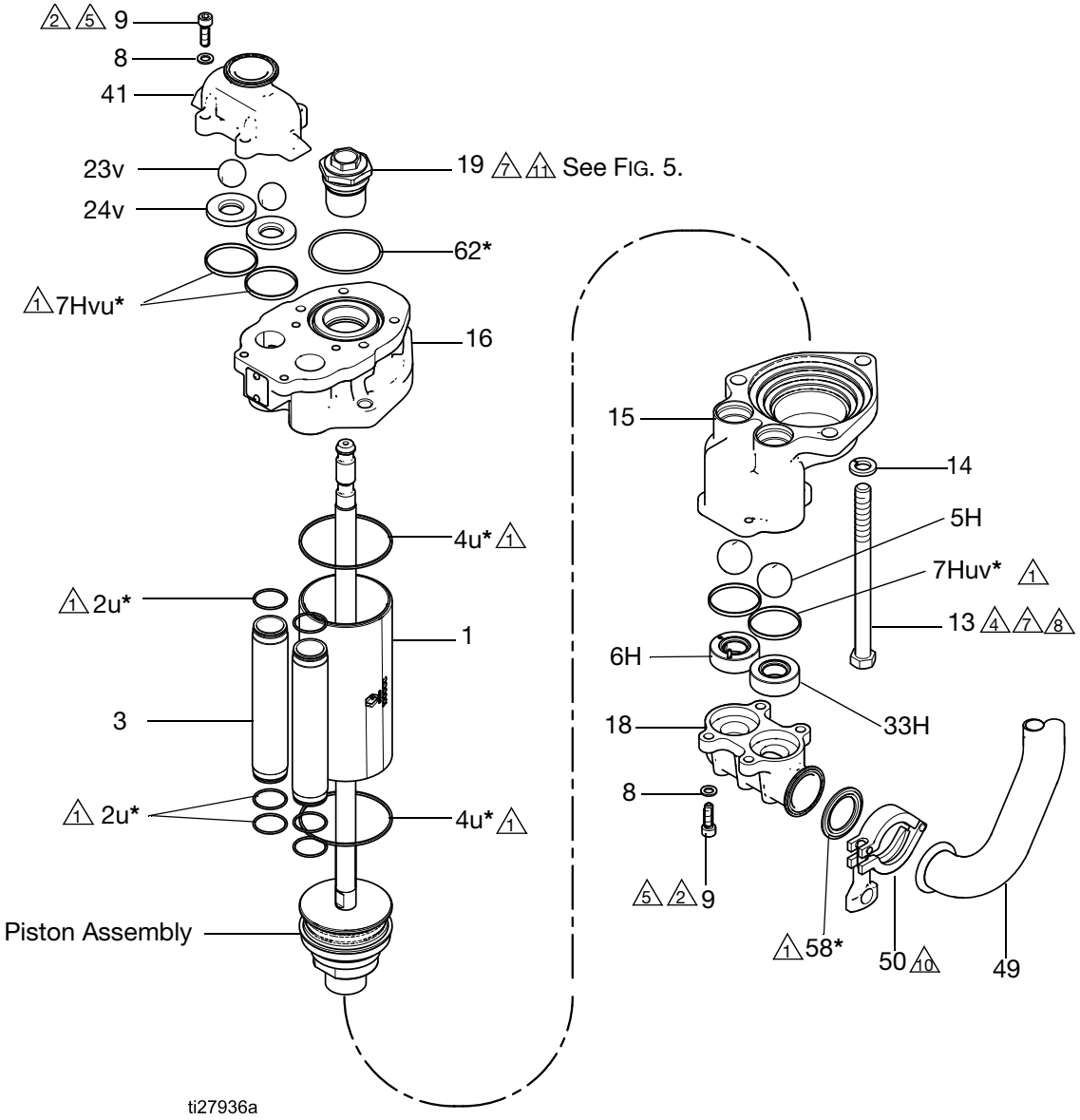

1 Apply lubricant to all packings and seals.

2 Apply removable (blue) Loctite® 243 to entire length of threads.

4 Tighten uniformly until cylinder (1) is seated.

5 Torque to 25-30 ft-lb (34-40 N•m).

7 Apply thread lubricant.

8 Torque to 35-40 ft-lb (47-54 N•m).

10 Torque to 15-20 ft-lb (20-27 N•m).

11 Torque to 70-75 ft-lb (95-102 N•m).

FIG. 11. Fluid Section Reassembly

Reassemble the Bellows Section

1. Install the o-ring (62*) in the top of the outlet fluid housing (16).

2. Set the bellows chamber (45) onto the outlet fluid housing (16) being careful not to damage the piston rod (17).

3. Apply removable (blue) Loctite® 243 to entire length of the threads on the capscrews (40). Install the four capscrews (40) with lock washers (46) to fasten the bellows chamber (45) to the outlet fluid housing (16). Tighten the capscrews (40) uniformly and torque to 35-40 ft-lb (47-54 N•m).

4. Insert the bellows assembly over the piston rod (17) and into the bellows chamber (45).

Install the Top Plate and Side Manifold

1. Install the top plate assembly (29, see FIG. 3, page 9) over the bellows assembly (53‡), by aligning the shapes of the bellows sleeve (34) and the backup seal (51‡*). To orient as desired, rotate by 90° increments, aligning the bolt holes.

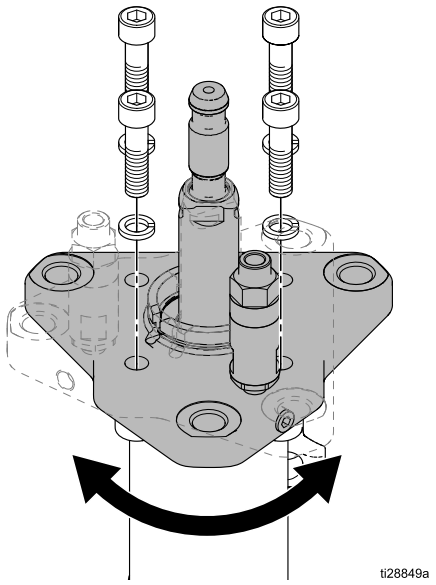

FIG. 12. Rotate the top plate as needed.

2. Apply removable (blue) Loctite® 243 to entire length of the threads on the capscrews (40). Install the four capscrews (40) with lock washers (46) in the top plate (29). This holds the bellows assembly (53‡) securely in place. Tighten the capscrews (40) uniformly and torque to 35-40 ft-lb (47-54 N•m).

3. If removed, apply thread sealant and install a new breather valve (26) in the port on the top plate. The valve must be installed so that it remains vertical.

4. Apply removable (blue) Loctite 243 to the screws (63). Install the retaining collar (60). Torque the screws to 18-22 in-lb (0.1-0.2 N•m).

5. Install the side manifold (49) to the bellows chamber (45) and the inlet check manifold (18), using the sanitary clamps (50) and gaskets (58*). Torque the clamps to 15-20 ft-lb (20-27 N•m).

6. Reconnect the lower to the motor as described in your separate pump manual.

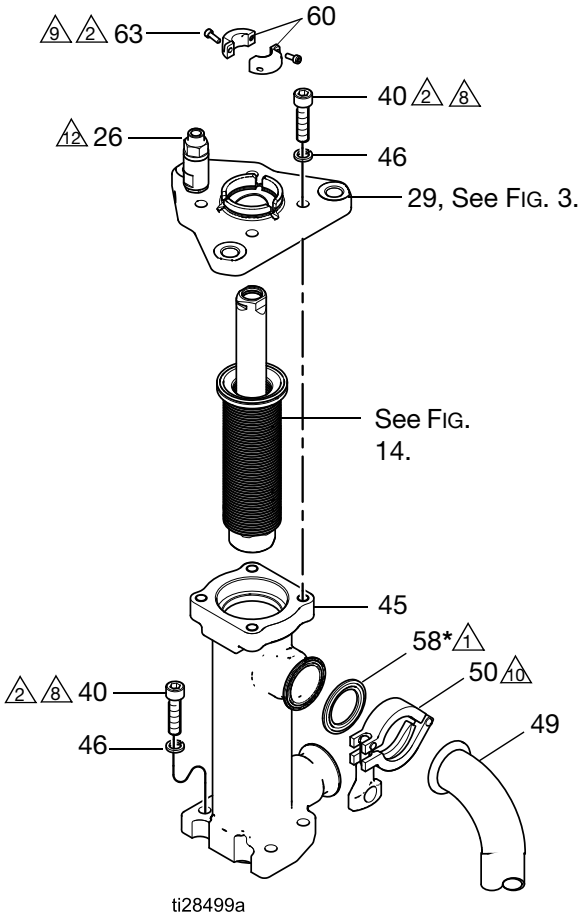

1 Apply lubricant to all packings and seals.

2 Apply removable (blue) Loctite® 243 to entire length of threads.

8 Torque to 35-40 ft-lb

9 Torque to 18-22 in-lb (0.1-0.2 N•m).

10 Torque to 15-20 ft-lb (20-27 N•m).

12 Apply thread sealant.

FIG. 13. Disassemble or Reassemble the Bellows Section

Replace the Bellows

Follow these instructions to replace just the bellows, without full disassembly of the lower. Bellows Repair Kit 17K766 is available. Kit parts are marked with a double dagger (‡).

1. Follow Steps 1 - 4 in **Preparation for Disassembly**, page 6, to relieve the pressure and prepare the lower for service.
2. Secure the inlet check manifold (18) in a vise.
3. Remove the retaining collar (60) by removing the screws (63).
4. Remove the four capscrews (40) and washers (46) from the top plate (29). This allows the bellows assembly to rotate with the top plate assembly. See FIG. 13, page 14.
5. Carefully lift the top plate assembly (29) off of the bellows chamber (45). See FIG. 13. When removing keep the top plate (29) level.

NOTE: See FIG. 3, page 9. The retaining ring (54), retaining washer (56), bearing housing (48), bearing (25) and backup seal (51) nest in the top plate and will slide off with the top plate (29).

6. Carefully remove the retaining ring (54), retaining washer (56), bearing housing (48), bearing (25) and backup seal (51) from the top plate (29). See FIG. 3, page 9.
7. Remove the bellows o-ring (55). See FIG. 4, page 9.
8. Remove the bellows assembly from the bellows chamber (45). Remove o-ring (57).
9. If the bellows has failed, also remove the breather valve (26) from the top plate. Clean the fluid path of any clogged paint.

NOTICE

If the bellows has failed, the breather valve (26) must be replaced and the fluid path cleared of clogged paint. Purchase and install Part 17J564. The breather valve keeps the bellows pressure low and prevents fluid escape if the bellows fail. Clogged paint will cause the valve not to work.

10. Clamp the flats of the bellows sleeve (34) in a vise.
11. Use a wrench on the flats of the bellows nut (59) to remove it from the bellows sleeve.
12. Remove o-ring (61) from inside of the bellows sleeve (34).
13. Work the bellows (53) up and off the bellows sleeve (34).
14. Lubricate and install o-ring (57*‡).
15. Slide the new bellows (53*‡) onto the bellows sleeve (34) and snap it into place.
16. Lubricate and install o-ring (61*‡) in the bellows sleeve.
17. Apply removable (blue) Loctite® 243 to the outside threads on the bellows sleeve.

18. Install the bellows nut (59) and torque to 25-30 ft-lb (34-41 N•m).

19. Insert the bellows assembly over the piston rod (17) and into the bellows chamber (45).

20. Lubricate and install the bellows o-ring (55*‡).

21. Apply lubricant to the backup seal (51*‡). Install the backup seal (51*‡) into the top plate. Be sure the seal seats completely. Use a press if needed.

22. Install the retaining ring (54), retaining washer (56), bearing housing (48) and bearing (25‡) into the top plate (29). See FIG. 3, page 9.

23. If removed, apply thread sealant and install a new breather valve (26) in the port in the top of the top plate. The valve must be installed so that it remains vertical.

24. Install the top plate assembly over the bellows assembly, by aligning the shapes of the bellows sleeve (34) and the backup seal (51‡*).

25. Apply removable (blue) Loctite® 243 to entire length of the threads on the capscrews (40). Install the four capscrews (40) with lock washers (46) in the top plate (29). This holds the bellows assembly (53‡) securely in place. Tighten the capscrews (40) uniformly and torque to 35-40 ft-lb (47-54 N•m).

26. Apply removable (blue) Loctite 243 to the screws (63). Install the retaining collar (60). Torque the screws to 18-22 in-lb (0.1-0.2 N•m).

27. Reconnect the lower to the motor as described in your separate pump manual.

NOTICE

The maximum fluid inlet pressure is 15 psi (0.1 MPa, 1.0 bar). Damage to the bellows may occur if you exceed this pressure. Do not use another pump or checking device to supply the bellows pump.

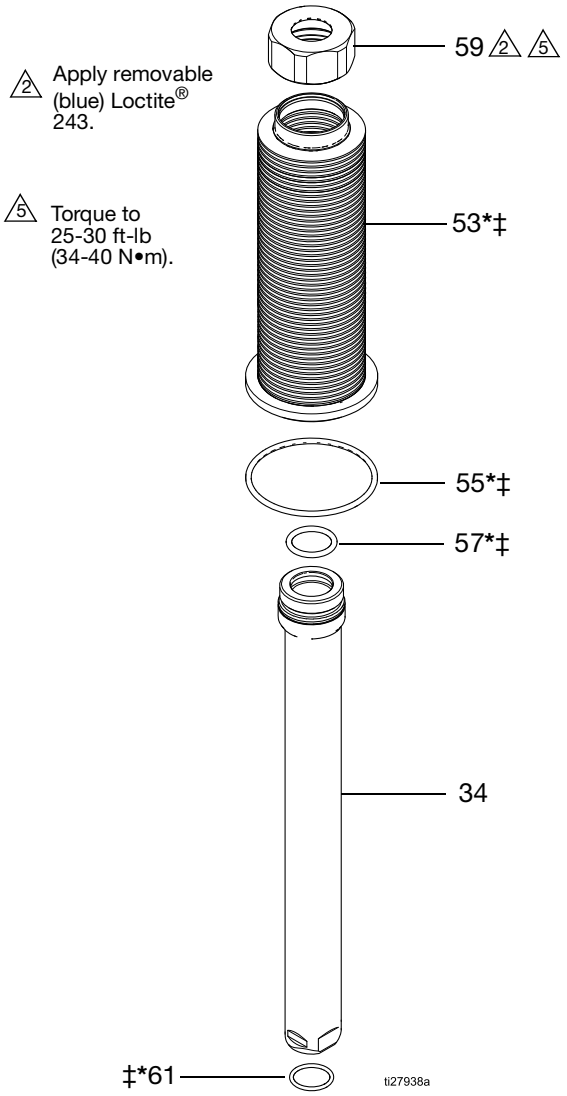

FIG. 14 Replace the Bellows

Parts

750cc Sealed 4-Ball Lowers

Part No. by size and material	Standard	Top Plate Rotation 90°	180°
750cc Sealed 4-Ball Lower, Ultralife	17K656	25N424	25N416
750cc Sealed 4-Ball Lower, Chrome	25N400	N/A	N/A
750cc Sealed 4-Ball Lower, High Pressure, Ultralife	26B217	N/A	N/A
750cc Sealed 4-Ball Lower, High Pressure, Chrome	26B218	N/A	N/A

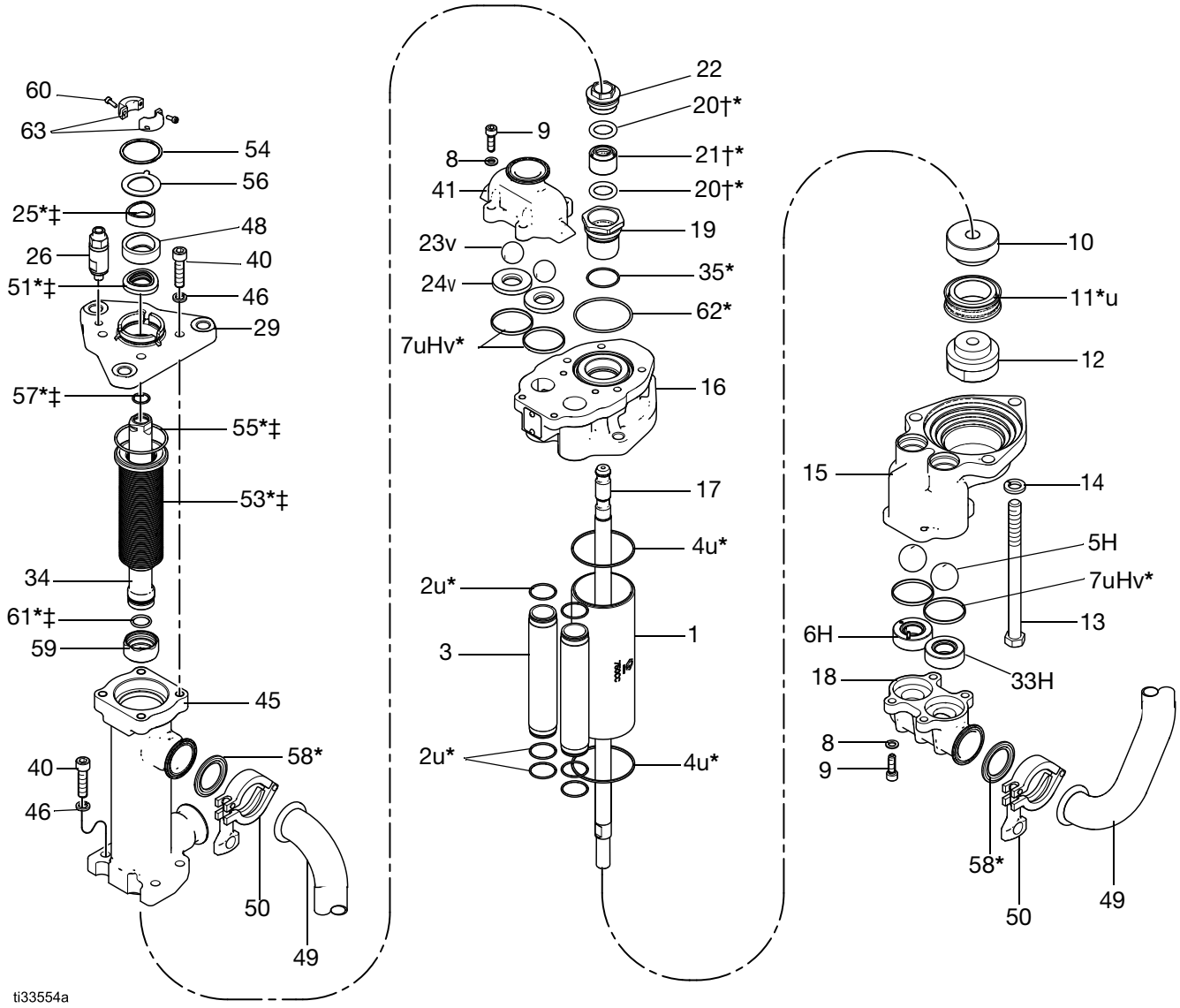

750cc Sealed 4-Ball Lowers

Ref.	Part	Description	Qty
1	685971	CYLINDER, Ultralife	1
	183049	CYLINDER, Chrome	
2***u**	108526	O-RING, PTFE	6
	18B866	O-RING, FX75 (26B217 and 26B218 only)	
3	183085	TUBE, FLUID	2
4***u**	181875	GASKET, cylinder	2
	19B635	GASKET, cylinder, o-ring, FX75 (26B217 and 26B218 only)	
5H	101968	BALL, inlet check, stainless steel	2
	15C869	BALL, inlet check, silicon nitride	
6H	253483	SEAT, inlet check, with pressure relief valve	1
	19B510	SEAT, inlet check, with pressure relief valve, High Pressure (26B217 and 26B218 only)	
7v**u*** H	181877	GASKET, check valve	4
8	111003	WASHER, flat	8
9	16K289	SCREW, cap, socket head, M8-1.25 x 25 mm	8
10	17M899	PISTON	1
11***u**	-----	SEAL, piston	1
12	17N040	NUT, piston	1
13	120199	SCREW, cap, hex head, 9/16-12 x 7.5 in.	3
14	108525	WASHER, lock, spring	3
15	16E907	HOUSING, fluid inlet	1
16	16X741	HOUSING, fluid outlet	1
17	17C104	ROD, piston, Ultralife	1
	17G075	ROD, piston, Chrome	
18	16X706	MANIFOLD, inlet check	1
19	17G404	CARTRIDGE, throat	1
20†*	-----	O-RING	2
21†*	-----	SEAL, lip	1
22	17G403	NUT, throat	1
23v	110259	BALL, outlet check, stainless steel	2
	17Y504	BALL, outlet check, silicon nitride	
24v	-----	SEAT, outlet check	2
25*‡	-----	BEARING	1
26	17J564	VALVE, breather	1
29	17A623	PLATE, top	1

Ref.	Part	Description	Qty
33H	239865	SEAT, inlet check, without pressure relief valve	1
34	17G191	SLEEVE, bellows	1
35*	107098	O-RING, PTFE	1
36s	172479	LABEL, warning	1
40	17B770	SCREW, cap, M10-1.5 x 40 mm	8
41	16E906	MANIFOLD, outlet check	1
	188104	MANIFOLD, outlet check, NPT	
45	17A585	CHAMBER, bellows	1
46	16K738	WASHER, split, lock, M10	8
47	16K116	LABEL, notice	1
48	17J438	HOUSING, bearing	1
49	16X514	MANIFOLD, side	1
50	118598	CLAMP, sanitary, 1.5 in.	2
51‡*	-----	SEAL, backup	1
53‡*	-----	BELLOWS	1
54	120762	RING, retaining	1
55‡*	117283	O-RING, bellows	1
56	17B752	WASHER, retaining	1
57‡*	117610	O-RING	1
58*	120351	GASKET, sanitary	2
59	17D102	NUT, bellows	1
60	17B610	COLLAR, retaining	2
61‡*	188554	O-RING	
62*	109499	O-RING	1
63	116475	SCREW, cap, socket head, M4-0.7 x 12 mm	2

----- *Parts not sold separately.*

s *Replacement Danger and Warning labels, tags, and cards are available at no cost.*

* *Parts are included in the Complete Pump Repair Kit. See **Repair Kits**.*

† *Parts are included in Lip Seal Kit 17K753.*

u *Parts are included in the Piston Seal Kit. See **Repair Kits**.*

‡ *Parts are included in Bellows Repair Kit 17K766.*

v *Parts are included in the Outlet Check Kit. See **Repair Kits**.*

H *Parts are included in Inlet Check Kit. See **Repair Kits**.*

1000cc, 1500cc, 2000cc Sealed 4-Ball Lowers

Part No. by size and material	Standard	Top Plate Rotation 90°	180°
1000cc Sealed 4-Ball Lower, Ultralife	17K657	25N425	25N417
1500cc Sealed 4-Ball Lower, Ultralife	17K658	25N426	25N418
2000cc Sealed 4-Ball Lower, Ultralife	17K659	25N427	25N419
1000cc Sealed 4-Ball Lower, Chrome	25N404	N/A	N/A
1500cc Sealed 4-Ball Lower, Chrome	25N408	N/A	N/A
2000cc Sealed 4-Ball Lower, Chrome	25N410	N/A	N/A

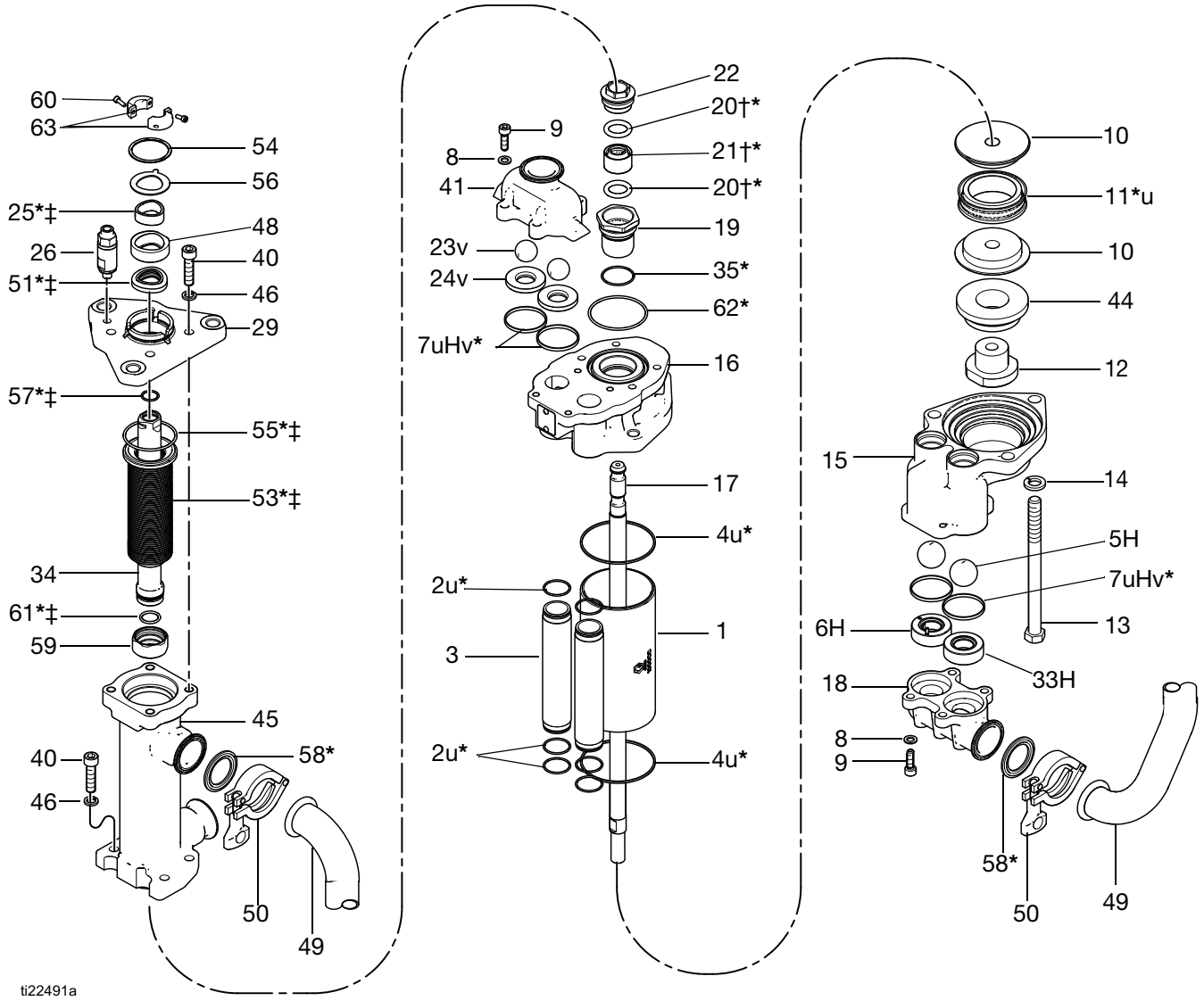

1000cc, 1500cc, 2000cc Sealed 4-Ball Lowers

Ref.	Part	Description	Qty
1		CYLINDER	
	17G628	1000cc, Ultralife	
	17G629	1500cc, Ultralife	
	17G630	2000cc, Ultralife	1
	183047	1000cc, Chrome	
	183048	1500cc, Chrome	
	15G882	2000cc, Chrome	
2***u**	108526	O-RING, PTFE	6
3	183085	TUBE, FLUID	2
4***u**		GASKET, cylinder	
	183094	1000cc	2
	181876	1500cc	
	15G881	2000cc	
5H	101968	BALL, inlet check, stainless steel	2
	15C869	BALL, inlet check, silicon nitride	
6H	253483	SEAT, inlet check, with pressure relief valve	1
7v**u*** H	181877	GASKET, check valve	4
8	111003	WASHER, flat	8
9	16K289	SCREW, cap, socket head, M8-1.25 x 25 mm	8
10		PISTON	
	15G883	1000cc	2
	15G884	1500cc	
	15G885	2000cc	
11***u**		SEAL, piston	
	-----	1000cc	1
	-----	1500cc	
	-----	2000cc	
12	15H989	NUT, piston	1
13	120199	SCREW, cap, hex head, 9/16-12 x 7.5 in.	3
14	108525	WASHER, lock, spring	3
15	16E907	HOUSING, fluid inlet	1
16	16X741	HOUSING, fluid outlet	1
17	17C104	ROD, piston, Ultralife	1
	17G075	ROD, piston, Chrome	
18	16X706	MANIFOLD, inlet check	1
19	17G404	CARTRIDGE, throat	1
20†*	-----	O-RING	2

Ref.	Part	Description	Qty
21†*	-----	SEAL, lip	1
22	17G403	NUT, throat	1
23v	110259	BALL, outlet check, stainless steel	2
	17Y504	BALL, outlet check, silicon nitride	
24v	-----	SEAT, outlet check	2
25*‡	-----	BEARING	1
26	17J564	VALVE, breather	1
29	17A623	PLATE, top	1
33H	239865	SEAT, inlet check, without pressure relief valve	1
34	17G191	SLEEVE, bellows	1
35*	107098	O-RING, PTFE	1
36s	172479	LABEL, warning	1
40	17B770	SCREW, cap, M10-1.5 x 40 mm	8
41	16E906	MANIFOLD, outlet check	1
44		SPACER, piston	
	16D850	1000cc	1
	16D851	1500cc	
	16D852	2000cc	
45	17A585	CHAMBER, bellows	1
46	16K738	WASHER, split, lock, M10	8
47	16K116	LABEL, notice	1
48	17J438	HOUSING, bearing	1
49	16X514	MANIFOLD, side	1
50	118598	CLAMP, sanitary, 1.5 in.	2
51‡*	-----	SEAL, backup	1
53‡*	-----	BELLOWS	1
54	120762	RING, retaining	1
55‡*	117283	O-RING, bellows	1
56	17B752	WASHER, retaining	1
57‡*	117610	O-RING	1
58*	120351	GASKET, sanitary	2
59	17D102	NUT, bellows	1
60	17B610	COLLAR, retaining	2
61‡*	188554	O-RING	
62*	109499	O-RING	1
63	116475	SCREW, cap, socket head, M4-0.7 x 12 mm	2

----- *Parts not sold separately.*

s *Replacement Danger and Warning labels, tags, and cards are available at no cost.*

* *Parts are included in the Complete Pump Repair Kit. See* ***Repair Kits****.*

† *Parts are included in Lip Seal Kit 17K753.*

u *Parts are included in the Piston Seal Kit. See* ***Repair Kits****.*

‡ *Parts are included in Bellows Repair Kit 17K766.*

v *Parts are included in the Outlet Check Kit. See* ***Repair Kits****.*

H *Parts are included in Inlet Check Kit. See* ***Repair Kits****.*

Connection Kits

The following kits are available to connect an existing motor to the sealed lower (this manual), the open wet cup lower (Manual 3A3452), or the enclosed wet cup lower (Manual 3A0539).

	Motor/Pump Style					
Lower Style	**President**	**Viscount I**	**Viscount II**	**E-Flo**	**Bulldog or Senator**	**NXT, High-Flo or E-Flo DC**
Sealed	17K523	17K519	17K520	17K524	17K517	17K525
Open Wet Cup or Enclosed Wet Cup	24J185 (standard) or 24J186 (stubby)	24F065	24J390	N/A	24F308	288209

Repair Kits

	Lower Size				
Description	**HP 750cc**	**750cc**	**1000cc**	**1500cc**	**2000cc**
Complete Pump Repair Kit (*) Includes Refs. 2, 4, 7, 11, 20, 21, 25, 35, 51, 53, 55, 57, 58, 61, 62	25U310	17K758	17K760	17K762	17K764
Chrome Piston Rod**	17G075				
Lip Seal Kit (†) Includes Refs. 20 and 21	17K753				
Piston Seal Kit (u) Includes Refs. 2, 4, 7, and 11.					
ZXP Seals (standard)	N/A	17K912	17K913	17K914	17K915
UHMWPE Seals		16E904	277360	277362	277358
PTFE Seals**		16E895	277361	277363	277359
HP 750cc Seals	25U311	N/A			
Bellows Repair Kit (‡) Includes Refs. 25, 51, 53, 55, 57, and 61	17K766				
Outlet Check Kit (v) Includes Refs. 7, 23, and 24					
Carbide Seat (standard)	24F249				
Stainless Steel Seat	17K756				
ZX Seat	17K757				
Carbide Seat with Silicon Nitride Balls	26A778				
Inlet Check Kit (H) Includes Refs. 5, 6, 7, and 33.					
Stainless Steel Ball (standard)	25U312	17K526			
Silicon Nitride Balls	25U313	26A777			

** *Use this component only when required for chemical compatibility. Use may result in a reduced cycle life.*

California Proposition 65

CALIFORNIA RESIDENTS

⚠ **WARNING:** Cancer and reproductive harm – www.P65warnings.ca.gov.

Dimensions

Standard Top Plate Rotation

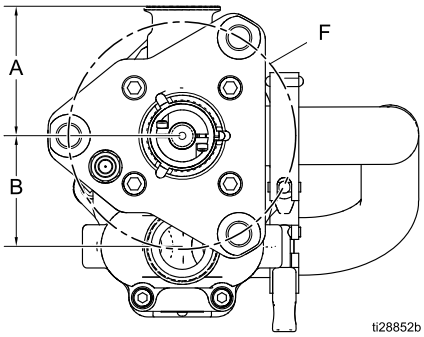

90° Top Plate Rotation

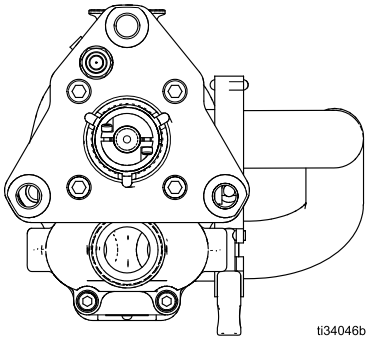

180° Top Plate Rotation

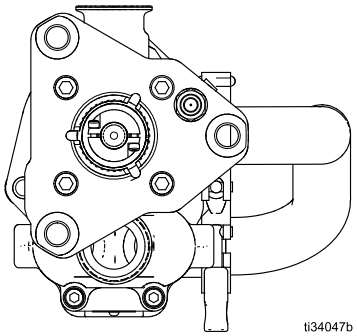

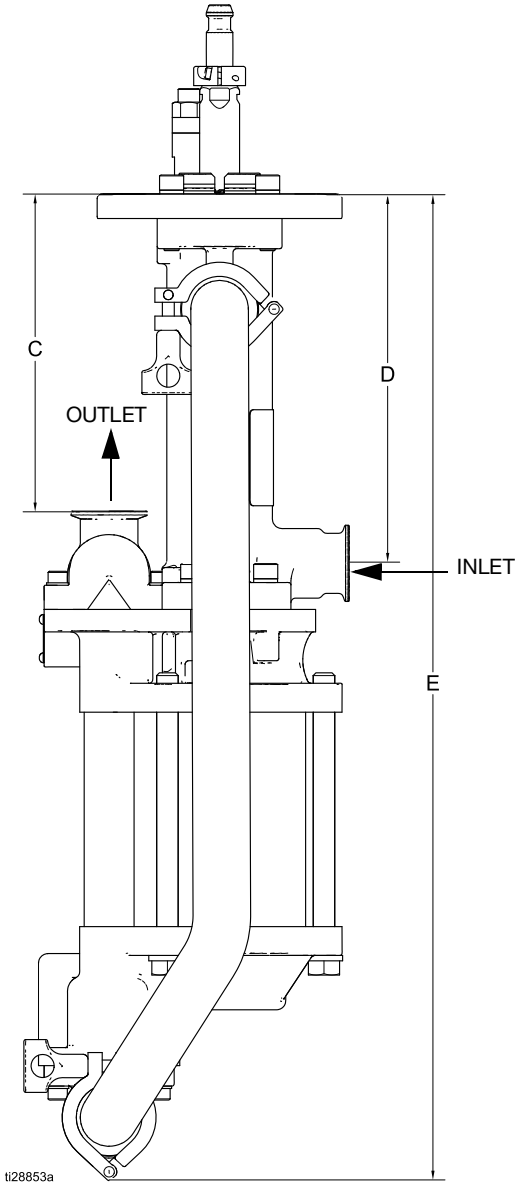

Dimension	U.S.	Metric
A	3.4 in.	9 cm
B	2.9 in.	7 cm
C	8.3 in.	21 cm
D	9.6 in.	24 cm
E	25.7 in.	65 cm
F	5.9 in.	15 cm

Technical Specifications

4-Ball Pump Lowers (750cc, 1000cc, 1500cc, and 2000cc Sizes)		
	U.S.	**Metric**
Maximum Fluid Working Pressure		
Model 26B217 Model 26B218	900psi	6.2 MPa, 62 bar
Model 17K656 Model 25N424 Model 25N416 Model 25N400 Model 17K657 Model 25N425 Model 25N417	600psi	4.1 MPa, 41 bar
Model 17K658 Model 25N426 Model 25N418 Model 25N408 Model 17K659 Model 25N427 Model 25N419 Model 25N410	460 psi	3.2 MPa, 32 bar
Maximum fluid inlet pressure	15 psi	0.1 MPa, 1.0 bar
Displacement per Cycle (4.75 in. [12 cm] stroke)		
Model 26B217 Model 26B218 Model 17K656 Model 25N424 Model 25N416 Model 25N400	750cc	
Model 17K657 Model 25N425 Model 25N417 Model 25N404	1000cc	
Model 17K658 Model 25N426 Model 25N418 Model 25N408	1500cc	
Model 17K659 Model 25N427 Model 25N419 Model 25N410	2000cc	
Maximum Fluid Temperature Rating	150°F	66°C
Fluid Inlet and Outlet Sizes	1-1/2 in. Sanitary Quick Clamp	
Wetted Parts	Stainless Steel, PTFE, Ultra-High Molecular Weight Polyethylene, Tungsten Carbide, Fluoropolymer	

Loctite® is a registered trademark of the Loctite Corporation.

Graco Standard Warranty

Graco warrants all equipment referenced in this document which is manufactured by Graco and bearing its name to be free from defects in material and workmanship on the date of sale to the original purchaser for use. With the exception of any special, extended, or limited warranty published by Graco, Graco will, for a period of twelve months from the date of sale, repair or replace any part of the equipment determined by Graco to be defective. This warranty applies only when the equipment is installed, operated and maintained in accordance with Graco's written recommendations.

This warranty does not cover, and Graco shall not be liable for general wear and tear, or any malfunction, damage or wear caused by faulty installation, misapplication, abrasion, corrosion, inadequate or improper maintenance, negligence, accident, tampering, or substitution of non-Graco component parts. Nor shall Graco be liable for malfunction, damage or wear caused by the incompatibility of Graco equipment with structures, accessories, equipment or materials not supplied by Graco, or the improper design, manufacture, installation, operation or maintenance of structures, accessories, equipment or materials not supplied by Graco.

This warranty is conditioned upon the prepaid return of the equipment claimed to be defective to an authorized Graco distributor for verification of the claimed defect. If the claimed defect is verified, Graco will repair or replace free of charge any defective parts. The equipment will be returned to the original purchaser transportation prepaid. If inspection of the equipment does not disclose any defect in material or workmanship, repairs will be made at a reasonable charge, which charges may include the costs of parts, labor, and transportation.

THIS WARRANTY IS EXCLUSIVE, AND IS IN LIEU OF ANY OTHER WARRANTIES, EXPRESS OR IMPLIED, INCLUDING BUT NOT LIMITED TO WARRANTY OF MERCHANTABILITY OR WARRANTY OF FITNESS FOR A PARTICULAR PURPOSE.

Graco's sole obligation and buyer's sole remedy for any breach of warranty shall be as set forth above. The buyer agrees that no other remedy (including, but not limited to, incidental or consequential damages for lost profits, lost sales, injury to person or property, or any other incidental or consequential loss) shall be available. Any action for breach of warranty must be brought within two (2) years of the date of sale.

GRACO MAKES NO WARRANTY, AND DISCLAIMS ALL IMPLIED WARRANTIES OF MERCHANTABILITY AND FITNESS FOR A PARTICULAR PURPOSE, IN CONNECTION WITH ACCESSORIES, EQUIPMENT, MATERIALS OR COMPONENTS SOLD BUT NOT MANUFACTURED BY GRACO. These items sold, but not manufactured by Graco (such as electric motors, switches, hose, etc.), are subject to the warranty, if any, of their manufacturer. Graco will provide purchaser with reasonable assistance in making any claim for breach of these warranties.

In no event will Graco be liable for indirect, incidental, special or consequential damages resulting from Graco supplying equipment hereunder, or the furnishing, performance, or use of any products or other goods sold hereto, whether due to a breach of contract, breach of warranty, the negligence of Graco, or otherwise.

FOR GRACO CANADA CUSTOMERS
The Parties acknowledge that they have required that the present document, as well as all documents, notices and legal proceedings entered into, given or instituted pursuant hereto or relating directly or indirectly hereto, be drawn up in English. Les parties reconnaissent avoir convenu que la rédaction du présente document sera en Anglais, ainsi que tous documents, avis et procédures judiciaires exécutés, donnés ou intentés, à la suite de ou en rapport, directement ou indirectement, avec les procédures concernées.

Graco Information

For the latest information about Graco products, visit www.graco.com.
For patent information, see www.graco.com/patents.

TO PLACE AN ORDER, contact your Graco distributor or call to identify the nearest distributor.
Toll Free Phone Number: 1-800-328-0211

All written and visual data contained in this document reflects the latest product information available at the time of publication. Graco reserves the right to make changes at any time without notice.

Original instructions. This manual contains English. MM 333022

Graco Headquarters: Minneapolis
International Offices: Belgium, China, Japan, Korea

GRACO INC. AND SUBSIDIARIES • P.O. BOX 1441 • MINNEAPOLIS MN 55440-1441 • USA

Copyright 2015, Graco Inc. All Graco manufacturing locations are registered to ISO 9001.
www.graco.com
Revision P, October 2025