Installation-Operation

E-Flo® DCi Motor

3A8352K

EN

Electric drive for Graco paint circulation and supply pumps. For professional use only.

See page 3 for model and approvals information.

Important Safety Instructions

Read all warnings and instructions in this manual before using the equipment. Save all instructions.

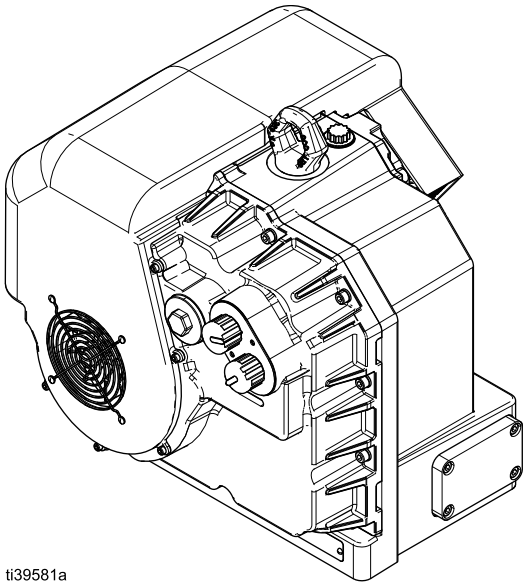

ti39581a

PROVEN QUALITY. LEADING TECHNOLOGY.

Contents

Related Manuals 2
Models 3
Safety Symbols 5
Warnings 6
Component Identification 9
Knobs 9
Indicator Lights 9
Installation 10
Hazardous Location Cabling and Conduit Requirements 10
Power Requirements 10
Typical Installation 11
Update Software 12
Electrical Accessories 12
Mounting 12
Grounding 13
Connect Supply Wiring 14
Connect Ethernet Cable 14
Connect Advanced Cable Connections 15
Install the Fill Cap 16
Install the Knob Cover 16
Operation 17
Startup 17
Motor Operation Modes Overview 17
Operation Modes 18
Shutdown 19
Maintenance 20
Change the Oil 20
Add Oil 20
Check Oil Level 20
Repair 21
Prepare Equipment for Service 21
Error Code Troubleshooting 22
Appendix A - System Control Drawing 2009199 . 23
Mounting Hole Pattern 26
Dimensions 26
Technical Specifications 27
California Proposition 65 27
Graco Standard Warranty 28

Related Manuals

Manual	Description	Referenced Equipment
311619	Pump Mounting Kits, Instructions	Wall and Stand Mounting Kit
3A8471	DCi Link Communication Module, Instructions	Communication Module
3A7828	E-Flo DCi Sealed 4-Ball Pumps, Instructions	Sealed 4-Ball Pumps
3A8815	E-Flo DCi Motor, Repair	Repair Kits
3A7826	E-Flo DCi 2-Ball Pumps	2-Ball Pumps

Models

E-Flo DCi Motors are only compatible with select models of pump lowers. See the Pump Matrix section of the DCi Pump System manuals listed in **Related Manuals**, page 2, for compatible pump lowers. Do not use an E-Flo DCi Motor with any pump lower that is not listed.

Model	Series	Description	kVA	Approvals
YM1132	A	3 HP (2.24 kW) Basic	3.4	2575 II 2(1) G Ex db IIB T4 Gb Ta= 0°C to +40°C CML 22ATEX1390X IECEx CML 22.0053X E115803 Explosion proof. For Class I, Div 1, Group C and D T4. Class I, Zone 1, AEx db IIB T4 Gb, Ex db IIB T4 Gb, 0°C≤Ta≤40°C.
YM1152	A	5 HP (3.73 kW) Basic	5.7	
YM1134	A	3 HP (2.24 kW) Basic	3.4	2575 II 2(1) G Ex db IIB T4 Gb Ta= 0°C to +40°C CML 22ATEX1390X CML 26JPN1076X IECEx CML 22.0053X
YM1154	A	5 HP (3.73 kW) Basic	5.7	
YM1131	A	3 HP (2.24 kW) Advanced	3.4	2575 II 2(1) G Ex db [ia Ga] IIB T4 Gb 0°C≤Ta≤40°C CML 22ATEX1390X IECEx CML 22.0053X E115803 Explosion proof. For Class I, Div 1, Group C and D T4. Class I, Zone 1, AEx db IIB T4 Gb, Ex db IIB T4 Gb, 0°C≤Ta≤40°C.
YM1151	A	5 HP (3.73 kW) Advanced	5.7	

YM1133	A	3 HP (2.24 kW) Advanced	3.4	CE 2575 Ex II 2(1) G Ex db [ia Gb] IIB T4 Gb 0°C ≤ Ta ≤ 40°C CML 22ATEX1390X CML 26JPN1076X IECEx CML 22.0053X KCs CCC
YM1153	A	5 HP (3.73 kW) Advanced	5.7	

Safety Symbols

The following safety symbols appear throughout this manual and on warning labels. Read the table below to understand what each symbol means.

Symbol	Meaning
	Burn Hazard
	Electric Shock Hazard
	Equipment Misuse Hazard
	Fire and Explosion Hazard
	Moving Parts Hazard
	Skin Injection Hazard
	Skin Injection Hazard
	Splash Hazard
	Toxic Fluid or Fumes Hazard

Symbol	Meaning
	Do Not Stop Leaks with Hand, Body, Glove or Rag
	Do Not Place Hands or Other Body Parts Near Fluid Outlet
	Eliminate Ignition Sources
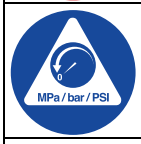	Follow Pressure Relief Procedure
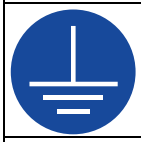	Ground Equipment
	Read Manual
	Ventilate Work Area
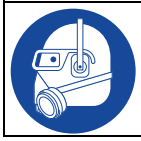	Wear Personal Protective Equipment

Safety Alert Symbol
This symbol indicates: Attention! Become Alert! Look for this symbol throughout the manual to indicate important safety messages.

Warnings

The following warnings are for the setup, use, grounding, maintenance, and repair of this equipment. The exclamation point symbol alerts you to a general warning and the hazard symbols refer to procedure-specific risks. When these symbols appear in the body of this manual or on warning labels, refer back to these Warnings. Product-specific hazard symbols and warnings not covered in this section may appear throughout the body of this manual where applicable.

DANGER

SEVERE ELECTRIC SHOCK HAZARD

This equipment is powered by more than 240V. Contact with this voltage will cause death or serious injury.

- Turn off and disconnect all power before disconnecting any cables and before servicing equipment.
- This equipment must be grounded. Connect only to a grounded power source.
- All electrical wiring must be done by a qualified electrician and comply with all local codes and regulations.

WARNING

FIRE AND EXPLOSION HAZARD

Flammable fumes, such as solvent and paint fumes, in **work area** can ignite or explode. Paint or solvent flowing through the equipment can cause static sparking. To help prevent fire and explosion:

- Use equipment only in well-ventilated area.
- Eliminate all ignition sources; such as pilot lights, cigarettes, portable electric lamps, and plastic drop cloths (potential static sparking).
- Ground all equipment in the work area. See **Grounding** instructions.
- Never spray or flush solvent at high pressure.
- Keep work area free of debris, including solvent, rags, and gasoline.
- Do not plug or unplug power cords, or turn power or light switches on or off when flammable fumes are present.
- Use only grounded hoses.
- Hold gun firmly to side of grounded pail when triggering into pail. Do not use pail liners unless they are anti-static or conductive.
- **Stop operation immediately** if static sparking occurs or you feel a shock. Do not use equipment until you identify and correct the problem.
- Keep a working fire extinguisher in the work area

SPECIAL CONDITIONS FOR SAFE USE

All flameproof joints are critical to the integrity of the motor. Do not repair flame proof joints. Replace all damaged parts with genuine Graco parts with no substitutions. The following conditions relate to safe installation and/or use of the equipment.

- The equipment must use M8x1.25 steel alloy class 12.9 screws with a tolerance fit of 6g/6H.
- Flameproof joints shall not be repaired.

WARNING

INSTRINSIC SAFETY

Intrinsically safe equipment that is installed improperly or connected to non-intrinsically safe equipment will create a hazardous condition and can cause fire, explosion, or electric shock. Follow local regulations and the following safety requirements.

- Be sure your installation complies with national, state, and local codes for the installation of electrical apparatus in a Class I, Group D, Division 1 Hazardous Location, including all of the local safety fire codes, NFPA 33, NEC 500 and 516, and OSHA 1910.107.
- Equipment that comes in contact with the equipment's intrinsically safe terminals must meet the entity parameter requirements specified in Control Drawing 2009199. See **Appendix A - System Control Drawing 2009199**, page 23. This includes safety barriers, DC voltage meters, ohmmeters, cables, and connections. Remove the unit from the hazardous area when troubleshooting.
- Do not install any equipment approved only for a non-hazardous location in a hazardous area, as defined in Article 500 of the National Electrical Code (USA) or your local electrical code. See the ID label for the intrinsic safety rating for your equipment.
- Ground the motor. Use a 12 gauge minimum ground wire, connected to a true earth ground. See **Grounding**, page 13.
- Do not operate the motor with any cover removed.
- Do not substitute system components, as this may impair intrinsic safety.

SKIN INJECTION HAZARD

High-pressure fluid from dispensing device, hose leaks, or ruptured components will pierce skin. This may look like just a cut, but it is a serious injury that can result in amputation. **Get immediate surgical treatment.**

- Engage trigger lock when not dispensing.
- Do not point dispensing device at anyone or at any part of the body.
- Do not put your hand over the fluid outlet.
- Do not stop or deflect leaks with your hand, body, glove, or rag.
- Follow the **Pressure Relief Procedure** in your pump manual when you stop dispensing and before cleaning, checking, or servicing equipment.
- Tighten all fluid connections before operating the equipment.
- Check hoses and couplings daily. Replace worn or damaged parts immediately.

WARNING

EQUIPMENT MISUSE HAZARD

Misuse can cause death or serious injury.

- Do not operate the unit when fatigued or under the influence of drugs or alcohol.
- Do not exceed the maximum working pressure or temperature rating of the lowest rated system component. See **Technical Specifications** in all equipment manuals.
- Use fluids and solvents that are compatible with equipment wetted parts. See **Technical Specifications** in all equipment manuals. Read fluid and solvent manufacturer's warnings. For complete information about your material, request Safety Data Sheets (SDSs) from distributor or retailer.
- Do not leave the work area while equipment is energized or under pressure.
- Turn off all equipment and follow the **Pressure Relief Procedure** in your pump manual when equipment is not in use.
- Check equipment daily. Repair or replace worn or damaged parts immediately with genuine manufacturer's replacement parts only.
- Do not alter or modify equipment. Alterations or modifications may void agency approvals and create safety hazards.
- Make sure all equipment is rated and approved for the environment in which you are using it.
- Use equipment only for its intended purpose. Call your distributor for information.
- Route hoses and cables away from traffic areas, sharp edges, moving parts, and hot surfaces.
- Do not kink or over bend hoses or use hoses to pull equipment.
- Keep children and animals away from work area.
- Comply with all applicable safety regulations.

MOVING PARTS HAZARD

Moving parts can pinch, cut, or amputate fingers and other body parts.

- Keep clear of moving parts.
- Do not operate equipment with protective guards or covers removed.
- Equipment can start without warning. Before checking, moving, or servicing equipment, follow the **Pressure Relief Procedure** in your pump manual and disconnect all power sources.

TOXIC FLUID OR FUMES HAZARD

Toxic fluids or fumes can cause serious injury or death if splashed in the eyes or on skin, inhaled, or swallowed.

- Read Safety Data Sheets (SDSs) to know the specific hazards of the fluids you are using.
- Store hazardous fluid in approved containers, and dispose of it according to applicable guidelines.

BURN HAZARD

Equipment surfaces and fluid that is heated can become very hot during operation. To avoid severe burns:

- Do not touch hot fluid or equipment.

PERSONAL PROTECTIVE EQUIPMENT

Wear appropriate protective equipment when in the work area to help prevent serious injury, including eye injury, hearing loss, inhalation of toxic fumes, and burns. Protective equipment includes but is not limited to:

- Protective eyewear, and hearing protection.
- Respirators, protective clothing, and gloves as recommended by the fluid and solvent manufacturer.

Component Identification

Knobs

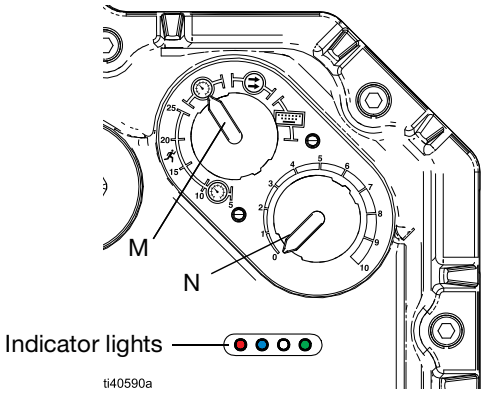

FIG. 1 Motor Components

M	Mode Knob	Selects operating mode
N	Setpoint Knob	Customizes the mode settings

Indicator Lights

Red	Error	Blinking red light indicates an error: See **Error Code Troubleshooting** on page 22
Yellow	PLC	Indicates ethernet connectivity
Green	Power	Indicates the power is on

Installation

Installation of this equipment involves potentially hazardous procedures. Improper wiring may cause electric shock or fire and explosion if the work is not performed properly. All electrical wiring must be done by a qualified electrician and comply with all local codes and regulations.

NOTE: See **Appendix A - System Control Drawing 2009199**, page 23, for intrinsically safe installation requirements.

NOTE: The 0V connection of the intrinsically safe outputs is connected to earth, which makes the equipment incapable of withstanding the 500V insulation test required by Clause 6.3.12 of IEC 60079-11. Take this into account when installing the E-Flo DCi motor.

Hazardous Location Cabling and Conduit Requirements

Explosion Proof Requirements

All electrical and communication wiring in the hazardous locations must be encased in approved explosion-proof conduit that is suitable for Class I, Division I, Group C and D locations. Follow all national, state, and local electrical codes and regulations.

US and Canada Conduit Location Requirement: Install a conduit seal within 457 mm (18 in.) of the motor enclosure.

Cable Rating Requirement: Use cables with a minimum rating of 70°C (158°F).

Power Requirements

The system requires a dedicated circuit protected with a circuit breaker in each ungrounded phase.

Model by Horsepower	Voltage	Phase	Hz	kVA
3 HP (2.24 kW)	380–480 Vac	3	50/60	3.4
5 HP (3.73 kW)	380–480 Vac	3	50/60	5.7

Typical Installation

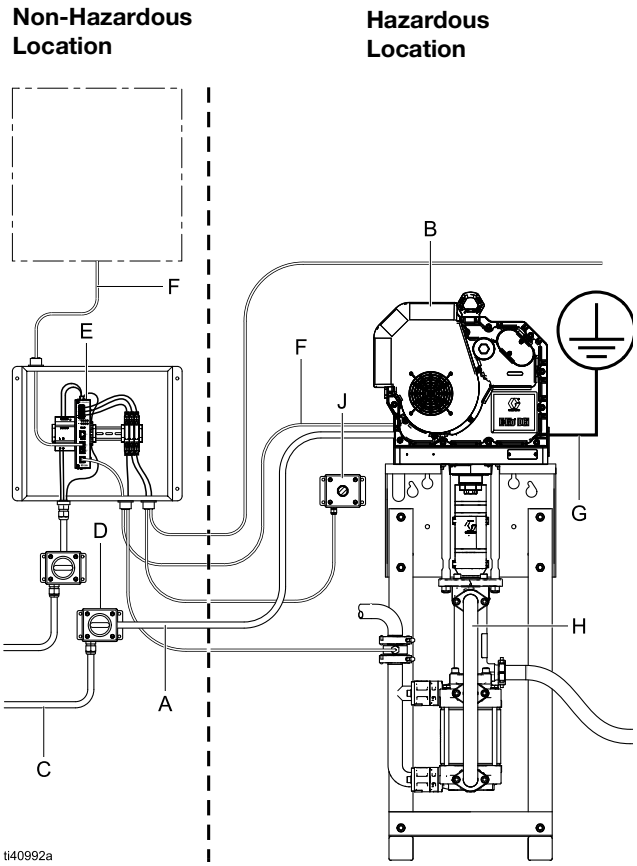

FIG. 2 Typical installation (with communication module)

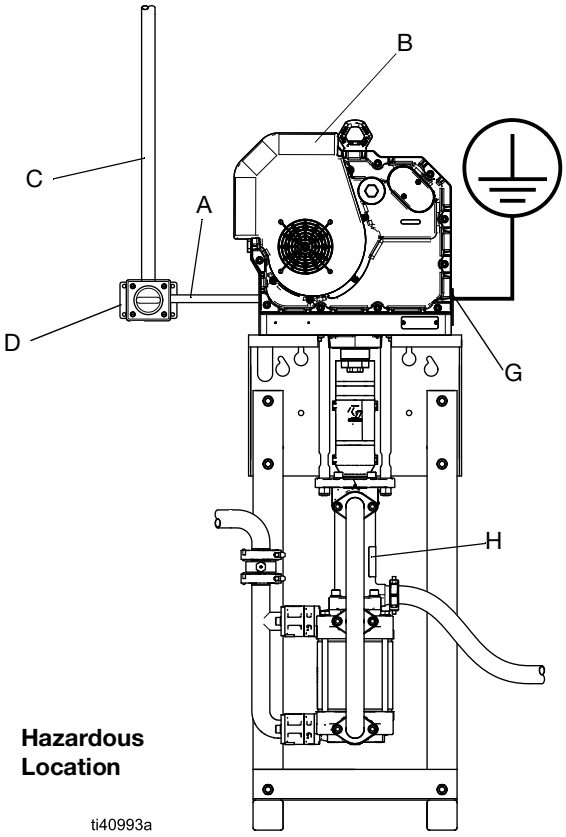

FIG. 3 Typical Installation (no communication module)

Key:

A Motor power wire
B E-Flo® DCi motor
C Main electrical supply wire
D Electrical disconnect
E Communication module
F Ethernet cable (CAT 5E or equivalent, RJ45 to M12, D-Code shielded cable)
G Static ground wire
H Graco pump lower
J Pump Run/Stop Switch

Update Software

Installation with no communication module:

1. Ensure the power is disconnected.
2. Remove the USB cover and remove the USB from the port.

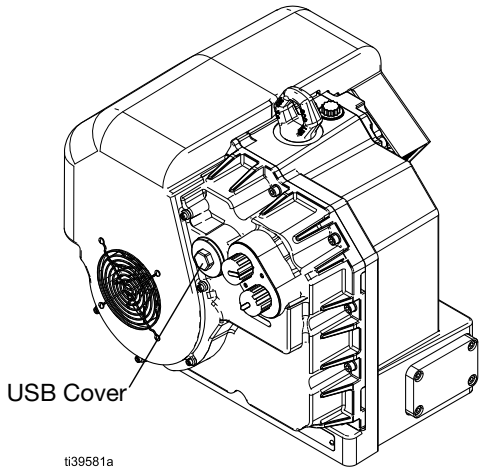

FIG. 4 USB Location

3. Plug it into a computer, and upload the software onto the USB port.
4. Reinstall USB in the motor and replace the USB cover, and torque to 15-20 ft-lb (20-27 N•m).

Installation with communication module:

See the communication module manual in the **Related Manuals**, page 2.

Electrical Accessories

Install accessories using adapters as necessary. Make sure they meet the system's size and pressure rating requirements.

Motor power wire (A): Connects the motor (B) to the supply source. Connect power wires to the communication module or to the electrical disconnect (D).

NOTE: If using a communication module, the wire orientation is important. See **Connect Supply Wiring** on page 14.

Main electrical supply wire (C): Powers the motor.

Electrical disconnect (D): Required in the system to disconnect and isolate electricity.

Ground wire (G): Grounds the motor. Purchase Graco part 222011 (not supplied).

Optional Communication Accessories

Communication module (E): Communicates with the motor and monitors equipment with digital and analog inputs and outputs.

Ethernet cable (F): CAT 5E or equivalent, RJ45 to M12, D-Code shielded cable. Connects communication module (E) to the motor (B).

Mounting

Location

Select a location for a wall or stand mount. When selecting the location for the equipment, keep the following in mind:

- There must be sufficient space on all sides of the equipment for installation, operator access, maintenance, and air circulation.
- Ensure that the mounting surface and mounting hardware are strong enough to support the weight of the equipment, fluid, hoses, and stress caused during operation.
- There must be an electrical disconnect (D) within easy reach of the equipment. See **Typical Installation**, page 11.

Mount the Motor

Use a stand or wall mounting kit to mount the motor (B) to a Graco pump lower (H) using the **Mounting Hole Pattern**, page 26. See mounting kit in the **Related Manuals**, page 2 for additional instructions.

Grounding

The equipment must be grounded to reduce the risk of static sparking and electric shock. Electric or static sparking can cause fumes to ignite or explode. Improper grounding can cause electric shock. Grounding provides an escape wire for the electric current.

Static Grounding

Use a ground wire (G) to connect the motor (B) to a true earth ground.

1. Loosen the ground screw.
2. Insert a ground wire (G).

NOTE: Use a minimum 14 gauge (2.08 mm^2) sized wire.

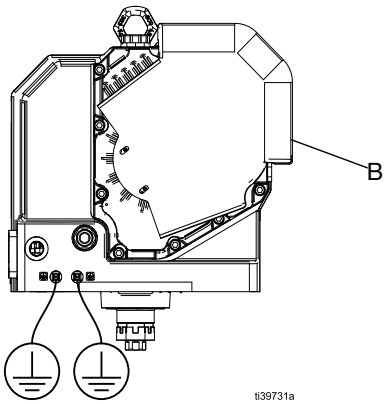

FIG. 5 Motor ground wire location

3. Tighten the ground screw securely.
4. Connect the other end of the ground wire (G) to a true earth ground.

Electrical Grounding

1. Ensure that the electrical disconnect (D) is shut off and locked out.

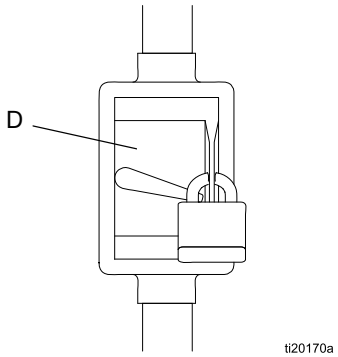

FIG. 6 Locked out disconnect example

2. Remove the cover to access the motor electrical wiring compartment (EC).
3. Connect the supply ground wire to GND.

NOTE: The ground wire size must be equal or greater than the phase wires.

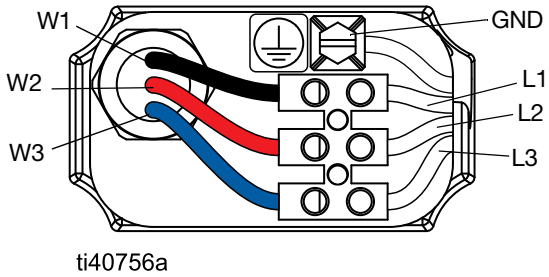

FIG. 7 Motor wiring

4. Connect the other end of the supply ground wire to a true earth ground.

Connect Supply Wiring

All electrical wiring must be done by a qualified electrician and comply with all local codes and regulations.

1. Ensure that the electrical disconnect (D) is shut off and locked out. See FIG. 6.
2. Bring the power wires (L1, L2, and L3) through the 3/4-14npt(f) inlet port of the electrical wiring compartment. Connect the wires to the terminal blocks. Use a minimum 14 gauge (2.08 mm^2) sized wire.

NOTE: The maximum wire size that can be used with the terminal block is 8 AWG (10mm^2).

3. Torque terminal screws (TS) to 7 in-lb (0.79 N•m). **Do not over-torque.**
4. Close the electrical wiring compartment (EC). Torque the cover screws (CS) to 15 ft-lb (20 N•m).

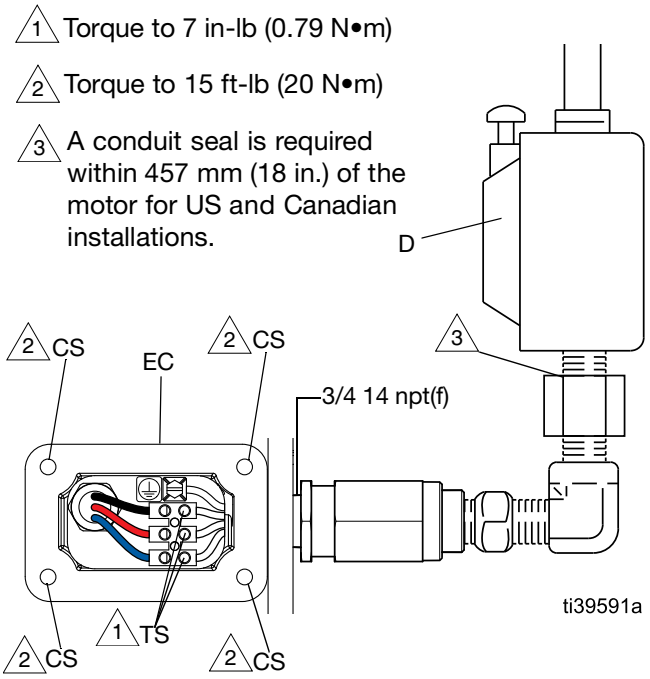

FIG. 8 Motor electrical compartment wires

Connect Ethernet Cable

Follow this procedure if a communication module is used for remote monitoring and control of the pump. Refer to manual 3A8471 for DCi Link installation and operation.

All electrical wiring must be done by a qualified electrician and comply with all local codes and regulations.

1. Ensure that the electrical disconnect (D) is shut off and locked out. See FIG. 6.
2. Remove the Ethernet Cover (108)and NPT Plug (109).

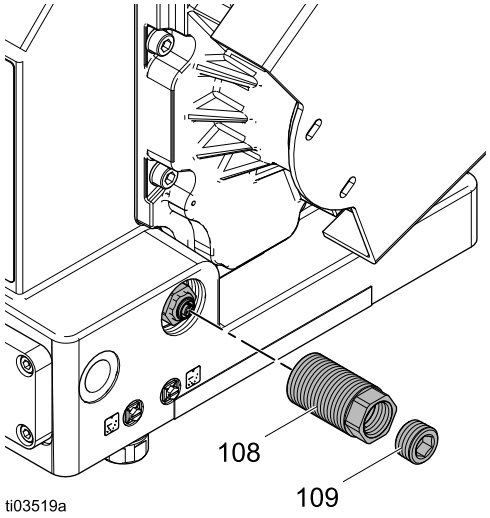

FIG. 9

3. Bring the ethernet cable (M12, D-Coded 4 pole connector) through the 3/4- 14npt(f) of the Ethernet Cover (108). Connect the ethernet cable to the M12 connection on the motor.

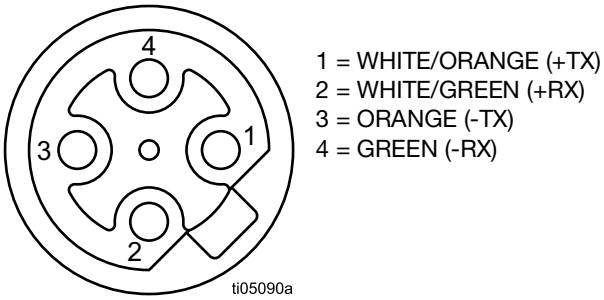

FIG. 10

4. Torque the Ethernet Cover to 54-58 in-lb (6.1-6.6 N-m).

5. Discard of 109.

3 A conduit seal is required within 457 mm (18 in.) of the motor for US and Canadian installations.

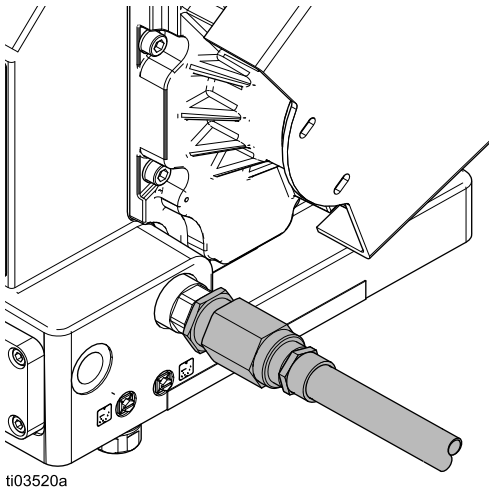

FIG. 11

Connect Advanced Cable Connections

Intrinsically Safe Installation Requirements for Advanced Motors

Do not substitute or modify system components as this may impair intrinsic safety. For component installation, maintenance, or operation instructions, read the component system manuals. Only install equipment in a hazardous location if the equipment is approved for a hazardous location. See the identification label for the intrinsic safety rating for your model.

See **Appendix A - System Control Drawing 2009199**, page 23, for installation requirements and entity parameters. Follow all installation instructions in your system component manuals.

The E-Flo DCi Advanced motors come with intrinsically safe I/O on the back side of the motor. See the table below for each connector's purpose.

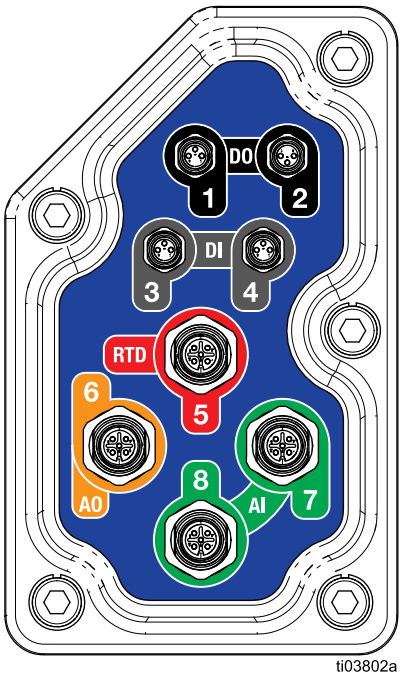

FIG. 12

Port Number	Connector Purpose
1	Digital Output Spare
2	Digital Output Spare
3	Start/Stop Input
4	Digital Input Spare
5	RTD Temperature Sensor
6	BPR Control, 4-20 mA Output
7*	Pressure Transducer 1, 4-20 mA Input
8*	Pressure Transducer 1, 4-20 mA Input

* *For best pressure control at the pump, choose a pressure transducer that is no more than three times the maximum working pressure of the pump.*

Install the Fill Cap

The motor is pre-filled with oil. Replace the shipping plug (SP) with the fill cap (FC) before first use.

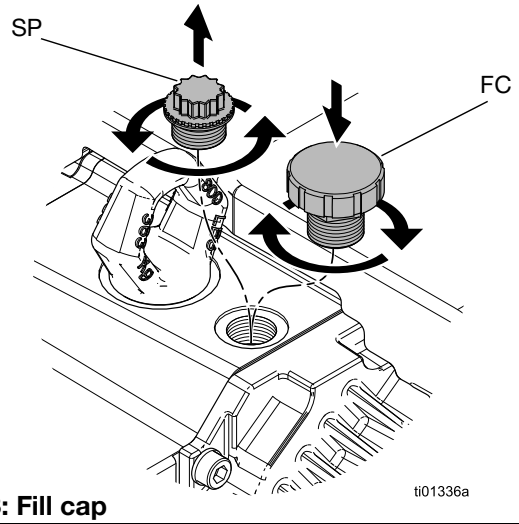

FIG. 13: Fill cap

Install the Knob Cover

The motor is shipped with a knob cover (KC) that may be installed to protect the Mode and Setpoint knobs after the motor is set up. Torque screws to 11 in-lbs (2.3 N•m)

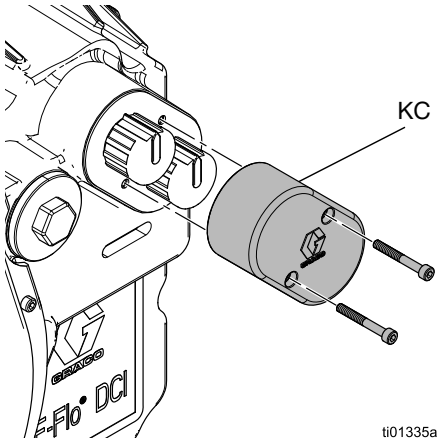

FIG. 14: Install the Knob Cover

Operation

Follow the pressure relief procedure in your pump manual whenever you see this symbol.

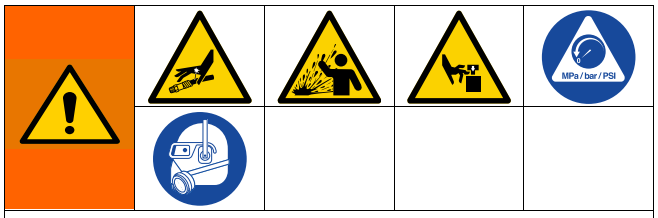

The equipment connected to the motor stays pressurized until the pressure is manually relieved. Pressurized fluid can cause serious injury such as skin injection, splashing fluid, and moving parts. Follow the Pressure Relief Procedure in your pump manual when you stop operating the motor.

Startup

1. Unlock the electrical disconnect (D) and turn it on.
2. Set the motor knobs. See **Motor Operation Modes Overview**, page 17.
3. Turn the setpoint knob (N) away from 0 to start the motor.

Motor Operation Modes Overview

- Select an operating mode with the mode knob (M).

	Pressure Mode	Maintains constant fluid pressure
	Pressure Mode with Integrated Runaway Protection	Maintains constant fluid pressure with speed limit parameters
	Flow Mode	Maintains constant speed
	Remote Mode	Remote motor control

- Customize the mode settings with the setpoint knob (N).

NOTE: Always turn the setpoint knob (N) fully counter-clockwise to 0 before changing the operation mode.

- Push both knobs in to lock in place after setting the mode to prevent accidental changes.

Operation Modes

Exceeding the equipment's maximum fluid pressure may cause components to rupture and result in a serious injury. Do not exceed the maximum potential working pressure. See **Technical Specifications** on page 28.

Pressure Mode

Pressure Mode adjusts the motor speed to maintain a constant fluid pressure.

1. Set the setpoint knob (N) to 0.
2. Set the mode knob (M) to Pressure ( ).
3. Set the pressure with the setpoint knob (N).
   - Clockwise increases the pressure
   - Counterclockwise decreases the pressure

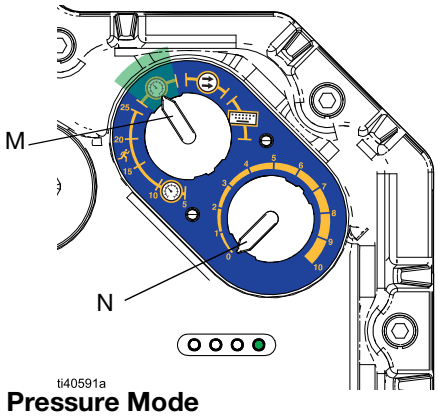

FIG. 15 Pressure Mode

Pressure Mode with Integrated Runaway Protection

Pressure Mode with Integrated Runaway Protection maintains a set fluid pressure, but will shut down if the motor exceeds a set cycle rate.

1. Set the setpoint knob (N) to 0.
2. Set the mode knob (M) to the desired maximum cycles per minute rate.
3. Set the pressure with the setpoint knob (N).
   - Clockwise increases the pressure
   - Counterclockwise decreases the pressure

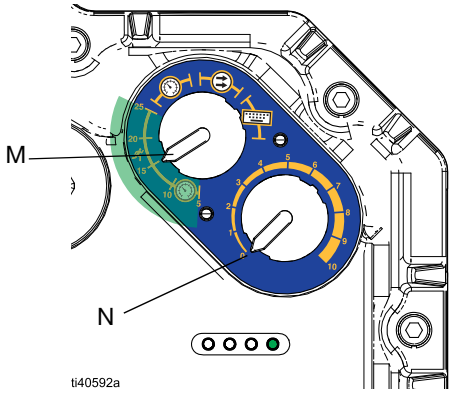

FIG. 16 Pressure Mode with Integrated Runaway Protection

Flow Mode

Flow Mode maintains a constant speed regardless of fluid pressure, up to the pump's maximum working pressure.

1. Set the setpoint knob (N) to 0.
2. Set the mode knob (M) to Flow ( ).
3. Set the cycle rate (flow) with the setpoint knob (N).
   - Clockwise increases the flow rate.
   - Counterclockwise decreases the flow rate.

NOTE: The flow rate scale (0-10) corresponds to a 0-25 cycles per minute cycle adjustment range.

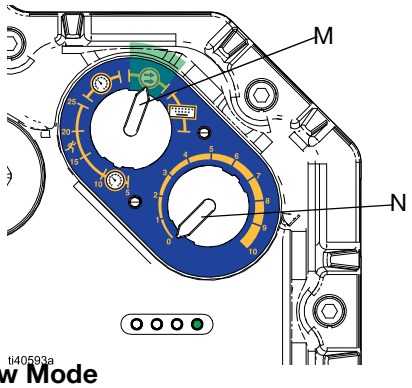

FIG. 17 Flow Mode

Remote Mode

Remote mode controls the motor remotely.

1. Set the setpoint knob (N) to 0.
2. Set the mode knob (M) to remote.
3. Use the DCi Link to control the motor remotely.

NOTE: The setpoint knob (N) can not control the motor in remote mode. The motor ignores setpoint knob (N) changes during remote mode operation.

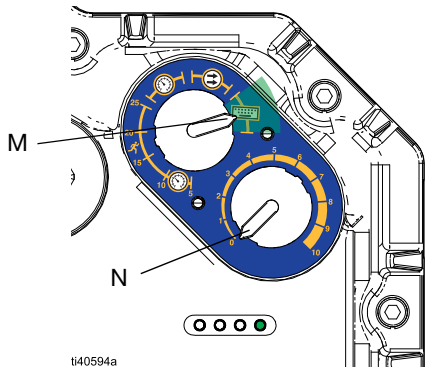

FIG. 18 Remote Mode

Shutdown

The equipment connected to the motor stays pressurized until the pressure is manually relieved. Pressurized fluid can cause serious injury such as skin injection, splashing fluid, and moving parts. Follow the Pressure Relief Procedure in your pump manual when you shutdown the motor.

Pressure Mode, Pressure Mode with Integrated Runaway Protection Mode, and Flow Mode

1. Pull and turn the setpoint knob (N) to 0.
2. Shut-off and lock out the electrical disconnect.
3. Follow the Pressure Relief Procedure in your pump manual.

Remote Mode

1. Shutdown the motor on the PLC.
2. Shut-off and lock out the electrical disconnect.
3. Follow the Pressure Relief Procedure in your pump manual.

Maintenance

Change the Oil

Change the oil after a break-in period of 200,000–300,000 cycles. After the break-in period, change the oil once a year.

1. Place a minimum 2 quart (1.9 liter) container under the oil drain port.
2. Remove the oil drain plug.
3. Allow all oil to drain from the motor.
4. Reinstall the oil drain plug. Torque to 25–30 ft-lb (34–40 N•m).
5. Add oil. See page 20.

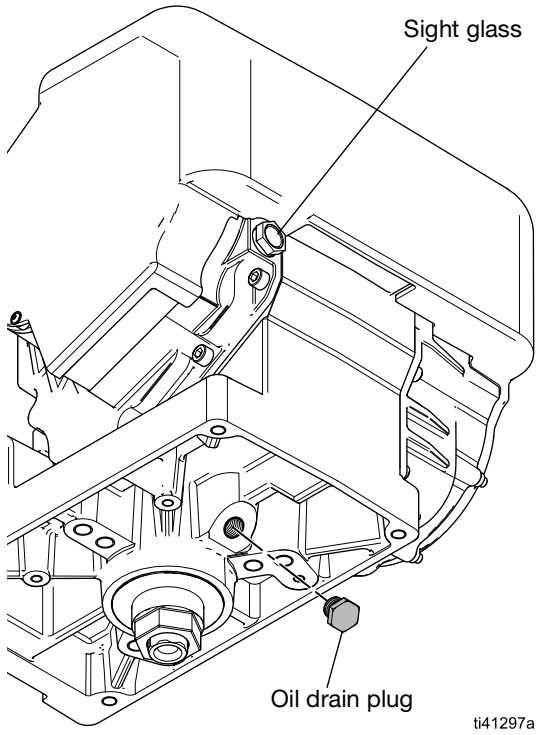

FIG. 19 Oil drain plug

Add Oil

1. Open the fill cap (FC).
2. Add a compatible oil. See **Technical Specifications** on page 28.

NOTE: The oil capacity is 2.0 quarts (1.9 liters). Do not overfill.

3. Reinstall the fill cap (FC).

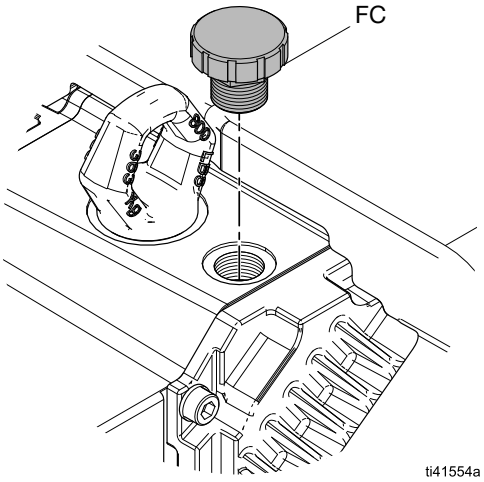

FIG. 20 Fill cap

Check Oil Level

Check the oil level in the sight glass. The oil level should be near the halfway point of the sight glass when the unit is not running.

Repair

Prepare Equipment for Service

Models in Explosive Atmospheres or Hazardous (Classified) Locations: To avoid injury from fire and explosion, move the equipment to a non-explosive or non-hazardous location before performing any electrical service or repair to the equipment.

See E-Flo DCi Motor Repair manual, 3A8815, for repair kits and parts. Contact your Graco representative for assistance.

Error Code Troubleshooting

The error indicator blinks during a motor error. See **Indicator Lights**, page 9.

Some blink codes have a repeating pattern. For example, blink code 2-6 is 2 blinks followed by a 6 blinks pattern.

There are two event types:

- Alarm stops the system
- Deviation notifies about a condition, but the system continues operating.

Blink Code	Description	Event Type
1 ✚	Motor Overcurrent: software triggered	Alarm
2 ✚	Motor Overcurrent: hardware triggered	Alarm
3	Motor DC Bus Over Voltage	Alarm
4	Motor DC Bus Under Voltage	Alarm
5	Motor AC Supply Over Voltage	Alarm
6	Motor AC Supply Under Voltage	Alarm
7	Motor AC Supply Power Loss	Alarm
8	Motor Internal Communication Loss: Secondary to Main	Alarm
9	Motor Internal Communication Loss: Main to Secondary	Alarm
1-2	Under Minimum Motor Force Threshold Setting	Deviation
1-3	Under Minimum Motor Force Threshold Setting	Alarm
1-4	Over Max Motor Force Threshold Setting	Deviation
1-5	Over Max Motor Force Threshold Setting	Alarm
1-6	Under Minimum Motor Pressure Threshold Setting	Deviation
1-7	Under Minimum Motor Pressure Threshold Setting	Alarm
1-8	Over Maximum Motor Pressure Threshold Setting	Deviation
1-9	Over Maximum Motor Pressure Threshold Setting	Alarm
2-3	Under Minimum Flow Rate Threshold Setting	Deviation

Blink Code	Description	Event Type
2-4	Under Minimum Flow Rate Threshold Setting	Alarm
2-5	Over Maximum Flow Rate Threshold Setting: Runaway	Deviation
2-6	Over Maximum Flow Rate Threshold Setting: Runaway Protection	Alarm
2-7	Temperature High: Motor Drive Electronics	Alarm
2-8	Temperature High: Motor	Alarm
2-9	Temperature High: Circuit Board	Alarm
3-4	Temperature High: Processor	Alarm
3-5	Motor Ac Supply: Phase Missing	Deviation
3-6	Motor Ac Supply: Phase Current Imbalance	Deviation
3-7	Motor Ac Supply: Phase Voltage Imbalance	Deviation
4-5	Encoder Calibration Active	Deviation
4-6	Stroke Calibration Active	Deviation
4-7	Encoder Calibration Alarm: Friction	Alarm
4-8	Encoder Calibration Alarm: All Others	Alarm
4-9	Stroke Calibration Alarm: Generic	Alarm
5-6	Stop Switch Active	Deviation
5-7	Interlock Active	Deviation
6-8	Current sensor failure	Alarm

✚ Possible causes:

- Faulty encoder calibration data. The encoder may be loose or not calibrated.
- Motor hardware failure

Appendix A - System Control Drawing 2009199

1. Installation should be in accordance with ANSI/ISA RP12.06.01 “Installation of intrinsically safe systems for hazardous (classified) locations” and the National Electrical Code (ANSI/NFPA 70).
2. Installation in Canada must be in accordance with the Canadian Electrical Code, CSA C22.1, Part 1, Appendix F.
3. For ATEX, install according to EN 60079–14 and applicable local and national codes.
4. For IECEx, install according to IEC 60079–14 and applicable local and national codes.
5. Multiple earthing of components is allowed only if a high integrity equipotential system is realized between the points of bonding.
6. Do not remove any cover until power has been removed.
7. For installation, maintenance, or operation instructions, see the instruction manual. See **Related Manuals**, page 2.

NOTE: See the tables on pages 24 and 25 for the entity parameters for each pin.

WARNING: Substitution of components may impair intrinsic safety.

ADVERTISSEMENT: La substitution de composants peut compromettre la securite intrinseque.

Table 1: Calculation Procedures

Divisions	Zones
Voc ≤ Vmax	Vo ≤ Vi
Isc ≤ Imax	Io ≤ Ii
Po ≤ PI	Po ≤ Pi
Ca ≥ Ci + Ccable	Co ≥ Ci + Ccable
La ≥ Li + Lcable	Lo ≥ Li + Lcable
La / Ra ≥ Li / Ri	Lo / Ro ≥ Li / Ri

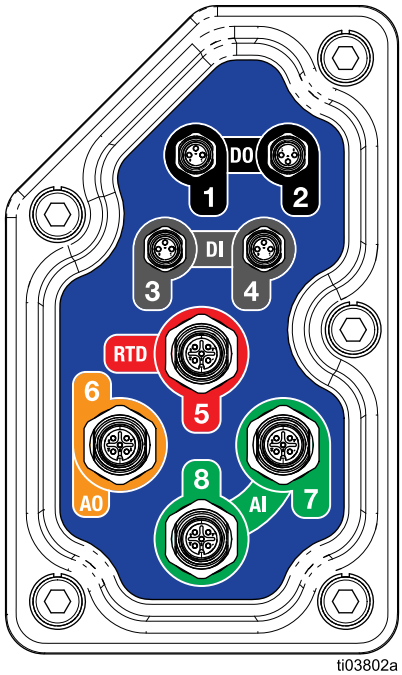

ti03802a

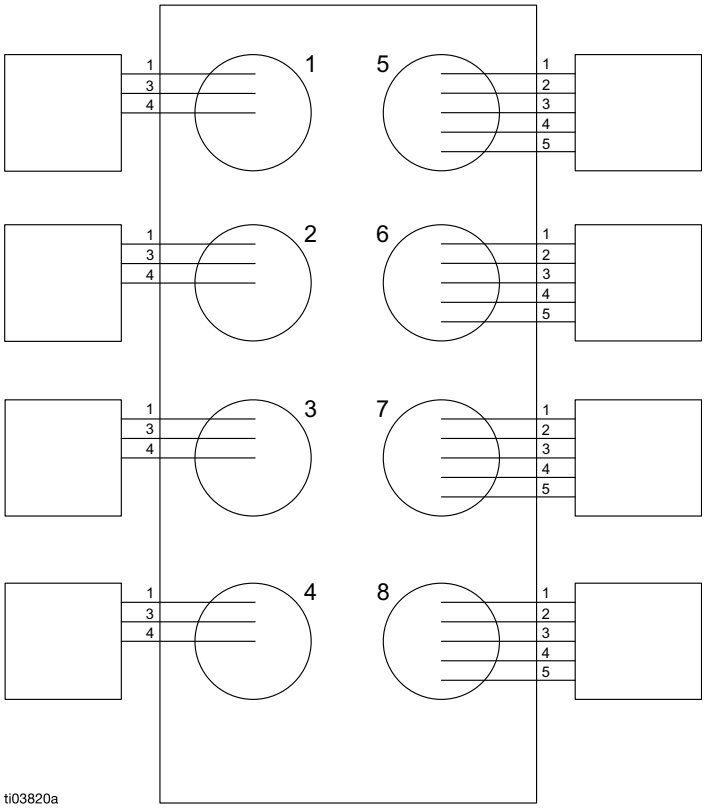

ti03820a

FIG. 21

Table 2: Port 1

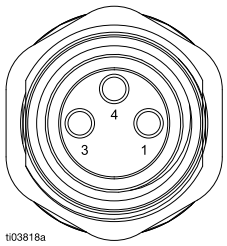

		Digital Output				
Pin	IEC (Zones)	Uo	Io	Po	Li	Ci
	ISA (Divisions)	Voc	Isc	Pt	La	Ca
	Units	V	mA	mW	uH	uF
1	NC	---	---	---	---	---
3	DO_1_3: Ground	---	---	---	---	---
4	DO_1_4: Pos	25.2	80	502	12	0

Table 3: Port 2

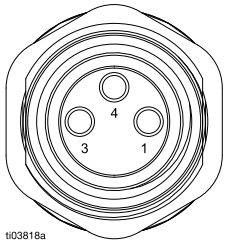

		Digital Output				
Pin	IEC (Zones)	Uo	Io	Po	Li	Ci
	ISA (Divisions)	Voc	Isc	Pt	La	Ca
	Units	V	mA	mW	uH	uF
1	NC	---	---	---	---	---
3	DO_2_3: Ground	---	---	---	---	---
4	DO_2_4: Pos	25.2	80	502	12	0

Table 4: Port 3

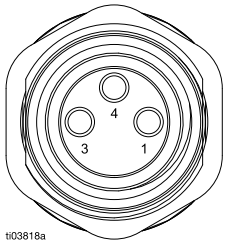

		Digital Input				
Pin	IEC (Zones)	Uo	Io	Po	Lo	Co
	ISA (Divisions)	Vmax	Imax	Pi	Li	Ci
	Units	V	mA	mW	uH	uF
1	NC	---	---	---	---	---
3	DI_3_3: Ground	---	---	---	---	---
4	DI_3_4: Pos	25.2	12	74	12	0

Table 5: Port 4

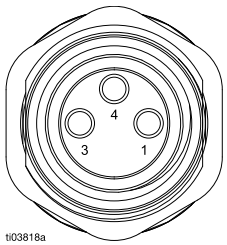

		Digital Intput				
Pin	IEC (Zones)	Uo	Io	Po	Lo	Co
	ISA (Divisions)	Vmax	Imax	Pi	Li	Ci
	Units	V	mA	mW	uH	uF
1	NC	---	---	---	---	---
3	DI_4_3: Ground	---	---	---	---	---
4	DI_4_4: Pos	25.2	12	74	12	0

Table 6: Port 5

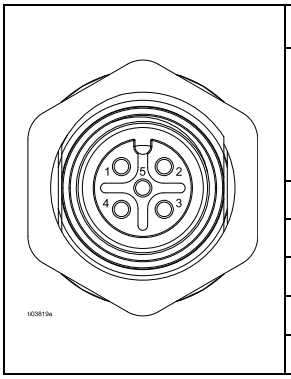

		RTD Input				
Pin	IEC (Zones)	Uo	Io	Po	Li	Ci
	ISA (Divisions)	Vmax	Imax	Pi	Li	Ci
	Units	V	mA	mW	uH	uF
1	AO_5_1: Pos	5.36	54	73	0	0
2	NC	---	---	---	---	---
3	AO_5_3: Ground	---	---	---	---	---
4	NC	---	---	---	---	---
5	NC	---	---	---	---	---

Table 7: Port 6

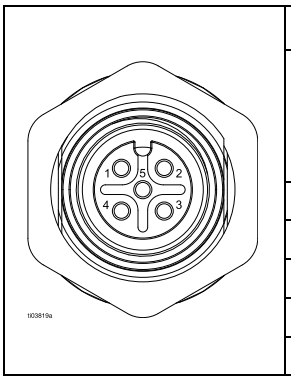

		Analog Output				
Pin	IEC (Zones)	Uo	Io	Po	Li	Ci
	ISA (Divisions)	Voc	Isc	Pt	La	Ca
	Units	V	mA	mW	uH	uF
1	AO_6_1: Pos	25.2	81	509	12	0
2	NC	---	---	---	---	---
3	AO_6_3: Ground	---	---	---	---	---
4	NC	---	---	---	---	---
5	NC	---	---	---	---	---

Table 8: Port 7

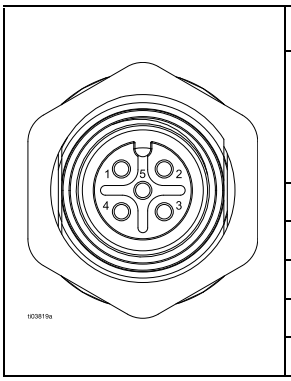

		Analog Input				
Pin	IEC (Zones)	Ui	Ii	Pi	Li	Ci
	ISA (Divisions)	Vmax	Imax	Pi	Li	Ci
	Units	V	mA	mW	uH	uF
1	AI_7_1: Pos	25.2	80	502	12	0
2	NC	---	---	---	---	---
3	AI_7_3: Ground	---	---	---	---	---
4	NC	---	---	---	---	---
5	NC	---	---	---	---	---

Table 9: Port 8

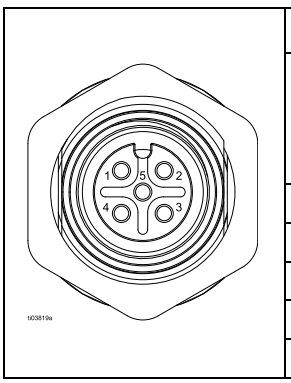

		Analog Input				
Pin	IEC (Zones)	Ui	Ii	Pi	Li	Ci
	ISA (Divisions)	Vmax	Imax	Pi	Li	Ci
	Units	V	mA	mW	uH	uF
1	AI_8_1: Pos	25.2	80	502	12	0
2	NC	---	---	---	---	---
3	AI_8_3: Ground	---	---	---	---	---
4	NC	---	---	---	---	---
5	NC	---	---	---	---	---

Mounting Hole Pattern

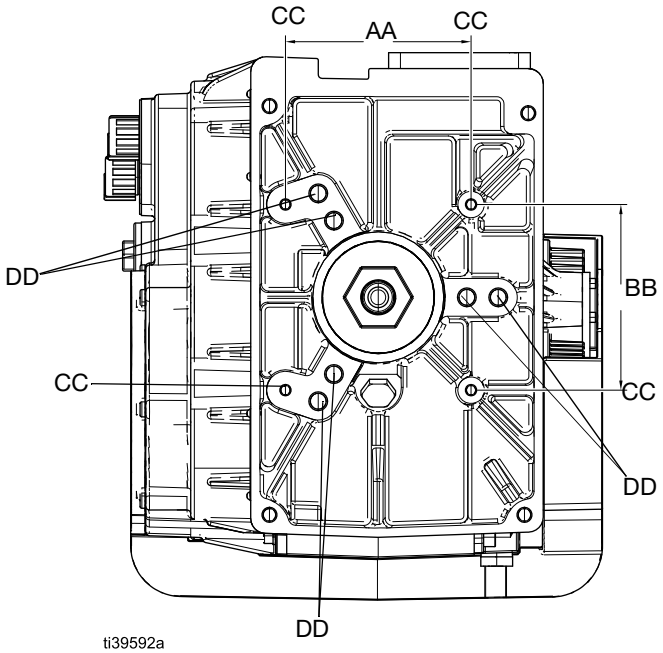

FIG. 22 Mounting Hole Pattern

AA	6.186 in. (157 mm)
BB	6.186 in. (157 mm)
CC	Four 3/8–16 mounting holes
DD	Six 5/8–11 tie rod holes • 8 in. (203 mm) x 120° bolt circle OR • 5.9 in. (150 mm) x 120° bolt circle

Dimensions

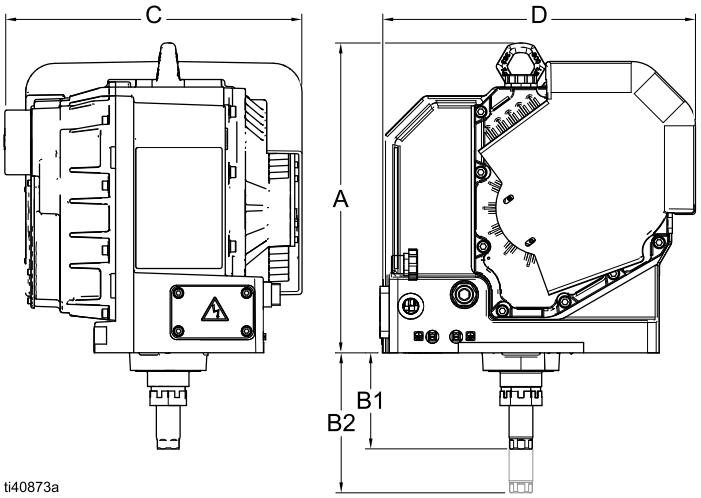

A	19.6 in. (498 mm)
B1 (mid-stroke)	5.60 in. (142 mm)
B2	7.98 in. (203 mm)
C	15.9 in. (404 mm)
D	18.3 in. (465 mm)

Technical Specifications

E-Flo DCi Motor		
YM1132 and YM1134	3 HP, 380–480 VAC, 3 phase, 50/60 Hz, 3.4 kVA	
YM1152 and YM1154	5 HP, 380–480 VAC, 3 phase, 50/60 Hz, 5.7 kVA	
Maximum force	**U.S.**	**Metric**
YM1132 and YM1134	4400 lbf	19572 N
YM1152 and YM1154	7800 lbf	34696 N
Maximum Potential Fluid Pressure		
YM1132 and YM1134	670000/v (volume of lower in cc) = psi	46200/v (volume of lower in cc) = bar
YM1152 and YM1154	1190000/v (volume of lower in cc) = psi	82000/v (volume of lower in cc) = bar
Stroke length	4.75 in.	121 mm
Maximum continuous cycle rate	20 cycles per minute	
Power inlet port size	3/4–14 npt(f)	
Ambient temperature range	32–104°F	0–40°C
Maximum fluid temperature	Refer to your pump manual.	
Sound data	Less than 75 dB(A)	
Oil capacity	2.0 quarts	1.9 liters
Oil specification	Graco Part Number 20A933 ISO 460 silicone-free high-pressure synthetic gear oil	
Weight	163 lb	74 kg

California Proposition 65

CALIFORNIA RESIDENTS

⚠ **WARNING:** Cancer and reproductive harm. – www.P65warnings.ca.gov.

All written and visual data contained in this document reflects the latest product information available at the time of publication.
Graco reserves the right to make changes at any time without notice.

Original instructions. This manual contains English. MM 3A8352
Graco Headquarters: Minneapolis
International Offices: Belgium, China, Japan, Korea

GRACO INC. AND SUBSIDIARIES • P.O. BOX 1441 • MINNEAPOLIS MN 55440-1441 • USA
Copyright 2022, Graco Inc. All Graco manufacturing locations are registered to ISO 9001.

www.graco.com
Revision K, September 2026

Graco Standard Warranty

Graco warrants all equipment referenced in this document which is manufactured by Graco and bearing its name to be free from defects in material and workmanship on the date of sale to the original purchaser for use. With the exception of any special, extended, or limited warranty published by Graco, Graco will, for a period of twelve months from the date of sale, repair or replace any part of the equipment determined by Graco to be defective. This warranty applies only when the equipment is installed, operated and maintained in accordance with Graco's written recommendations.

This warranty does not cover, and Graco shall not be liable for general wear and tear, or any malfunction, damage or wear caused by faulty installation, misapplication, abrasion, corrosion, inadequate or improper maintenance, negligence, accident, tampering, or substitution of non-Graco component parts. Nor shall Graco be liable for malfunction, damage or wear caused by the incompatibility of Graco equipment with structures, accessories, equipment or materials not supplied by Graco, or the improper design, manufacture, installation, operation or maintenance of structures, accessories, equipment or materials not supplied by Graco.

This warranty is conditioned upon the prepaid return of the equipment claimed to be defective to an authorized Graco distributor for verification of the claimed defect. If the claimed defect is verified, Graco will repair or replace free of charge any defective parts. The equipment will be returned to the original purchaser transportation prepaid. If inspection of the equipment does not disclose any defect in material or workmanship, repairs will be made at a reasonable charge, which charges may include the costs of parts, labor, and transportation.

THIS WARRANTY IS EXCLUSIVE, AND IS IN LIEU OF ANY OTHER WARRANTIES, EXPRESS OR IMPLIED, INCLUDING BUT NOT LIMITED TO WARRANTY OF MERCHANTABILITY OR WARRANTY OF FITNESS FOR A PARTICULAR PURPOSE.

Graco's sole obligation and buyer's sole remedy for any breach of warranty shall be as set forth above. The buyer agrees that no other remedy (including, but not limited to, incidental or consequential damages for lost profits, lost sales, injury to person or property, or any other incidental or consequential loss) shall be available. Any action for breach of warranty must be brought within two (2) years of the date of sale.

GRACO MAKES NO WARRANTY, AND DISCLAIMS ALL IMPLIED WARRANTIES OF MERCHANTABILITY AND FITNESS FOR A PARTICULAR PURPOSE, IN CONNECTION WITH ACCESSORIES, EQUIPMENT, MATERIALS OR COMPONENTS SOLD BUT NOT MANUFACTURED BY GRACO. These items sold, but not manufactured by Graco (such as electric motors, switches, hose, etc.), are subject to the warranty, if any, of their manufacturer. Graco will provide purchaser with reasonable assistance in making any claim for breach of these warranties.

In no event will Graco be liable for indirect, incidental, special or consequential damages resulting from Graco supplying equipment hereunder, or the furnishing, performance, or use of any products or other goods sold hereto, whether due to a breach of contract, breach of warranty, the negligence of Graco, or otherwise.

FOR GRACO CANADA CUSTOMERS
The Parties acknowledge that they have required that the present document, as well as all documents, notices and legal proceedings entered into, given or instituted pursuant hereto or relating directly or indirectly hereto, be drawn up in English. Les parties reconnaissent avoir convenu que la rédaction du présente document sera en Anglais, ainsi que tous documents, avis et procédures judiciaires exécutés, donnés ou intentés, à la suite de ou en rapport, directement ou indirectement, avec les procédures concernées.

Graco Information

For the latest information about Graco products, visit www.graco.com.
For patent information, see www.graco.com/patents.
TO PLACE AN ORDER, contact your Graco distributor or call to identify the nearest distributor.
Toll Free Phone Number: 1-800-328-0211