Instructions-Parts List

E-Flo® DC 4-Ball Pumps, Sealed or with Open Wet Cup

3A3384G
EN

Electric drive piston pumps for low- to medium-volume paint circulation applications.
For professional use only.

Important Safety Instructions
Read all warnings and instructions in this manual, and in the E-Flo DC Motor and E-Flo DC Three Phase manuals. **Save these instructions.**

See Technical Data for Maximum Working Pressures.
See page 3 for model part numbers and approvals information.

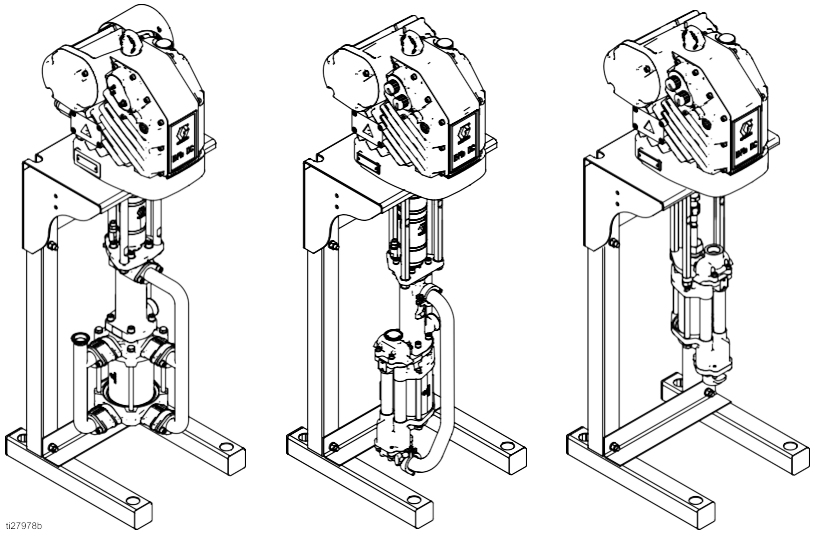

PROVEN QUALITY. LEADING TECHNOLOGY.

Contents

Related Manuals 2
Models 3
Warnings 6
Installation 9
- Location 9
- Mount the Pump 9
- Power Requirements 10
- Connect the Supply Wiring 12
- Grounding 13
- Fluid Line Accessories 14
- Check the Oil Level Before Using the Equipment 14
- Flush Before Using Equipment 14
- Control Module Accessory 14

Operation 15
- Startup 15
- Shutdown 15
- Pressure Relief Procedure 15

Maintenance 16
- Preventive Maintenance Schedule 16
- Flushing 16
- Change the Oil 16
- Check the Oil Level 17

Troubleshooting 18
Repair 19
- Disassembly 19
- Reassembly 19

Parts 21
- Pump Assembly 21
- Pump Matrix 23

Dimensions 29
Mounting Hole Patterns 31
Performance Charts 33
Technical Data 37
California Proposition 65 39

Related Manuals

Manual No.	Description
3A2526	Instructions-Parts Manual, E-Flo DC Motor, Single Phase
3A4409	Instructions-Parts Manual, E-Flo DC Motor, Three Phase
3A2527	Instructions-Parts Manual, E-Flo DC Control Module Kit
332013	Instructions-Parts Manual, Advanced Display Control Module (ADCM)
333022	Repair/Parts Manual, Sealed 4–Ball Lowers
3A3452	Repair/Parts Manual, 4–Ball Lowers with Open Wet Cup
3A5348	Repair/Parts Manual, Sealed 4-Ball Plus Lowers

Models

Table 1 Sealed 4-Ball and Open Wet Cup, 750–2000 cc

The part number for your equipment is printed on the equipment identification label (L). The part number includes digits from each of the following categories, depending on the configuration of your equipment. See Pump Matrix, page 23 for a complete list of pump part numbers.

E-Flo DC Pump (EC)	Lower Pump Size (1, 2, 3, or 4)	Motor, Controls, Approvals (1–8 or A-H)	Pump Type and Fittings (4, 5, 6, or C)	Mounting Type (0, 1, or 2)
EC	1: 750 cc 2: 1000 cc 3: 1500 cc 4: 2000 cc	1: 1 hp, Basic, Single Phase ATEX • FM • IECEx 2: 1 hp, Advanced, Single Phase ATEX • FM • IECEx 3: 2 hp, Basic, Single Phase ATEX • FM • IECEx 4: 2 hp, Advanced, Single Phase ATEX • FM • IECEx 5: 1 hp, Basic, Single Phase ATEX • IECEx • TIIS • KCS 6: 1 hp, Advanced, Single Phase ATEX • IECEx • TIIS • KCS 7: 2 hp, Basic, Single Phase ATEX • IECEx • TIIS • KCS 8: 2 hp, Advanced, Single Phase ATEX • IECEx • TIIS • KCS A: 1 hp, Basic, Three Phase ATEX • FM • IECEx B: 1 hp, Advanced, Three Phase ATEX • FM • IECEx C: 2 hp, Basic, Three Phase ATEX • FM • IECEx D: 2 hp, Advanced, Three Phase ATEX • FM • IECEx E: 1 hp, Basic, Three Phase ATEX • IECEx • TIIS • KCS F: 1 hp, Advanced, Three Phase ATEX • IECEx • TIIS • KCS G: 2 hp, Basic, Three Phase ATEX • IECEx • TIIS • KCS H: 2 hp, Advanced, Three Phase ATEX • IECEx • TIIS • KCS	4: Sealed, tri-clamp 5: Open Wet Cup, npt 6: Open Wet Cup, tri-clamp C: Sealed, tri-clamp, Chromex	0: None 1: Stand 2: Wall Bracket

Table 2 Sealed 4-Ball Plus, 2500 cc

The part number for your equipment is printed on the equipment identification label (L). The part number includes digits from each of the following categories, depending on the configuration of your equipment. See Pump Matrix, page 23 for a complete list of pump part numbers.				
E-Flo DC Pump (EC)	**Lower Pump Size (7)**	**Motor, Controls, Approvals (C, D, G, or H)**	**Pump Type and Fittings (4)**	**Mounting Type (0, 1, or 2)**
EC	7: 2500 cc	C: 2 hp, Basic, Three Phase ATEX • FM • IECEx D: 2 hp, Advanced, Three Phase ATEX • FM • IECEx G: 2 hp, Basic, Three Phase ATEX • IECEx • TIIS • NCS H: 2 hp, Advanced, Three Phase ATEX • IECEx • TIIS • NCS	4: Sealed, tri-clamp	0: None 1: Stand 2: Wall Bracket

Approvals

Single phase and three phase pumps with basic motors: ECx1xx models ECxAxx models ECx3xx models ECxCxx models ECx5xx models ECxExx models ECx7xx models ECxGxx models	CE	Ex II 2 G Ex db h IIA T3 Gb X
Single phase pumps with advanced motors: ECx2xx models ECx4xx models ECx6xx models ECx8xx models	CE	Ex II 2 (1) G Ex db h [ia Ga] IIA T3 Gb X
Three phase pumps with advanced motors: ECxBxx models ECxDxx models ECxFxx models ECxHxx models	CE	Ex II 2 (1) G Ex db h [ia op is Ga] IIA T3 Gb X

NOTE: See the E-Flo DC Motor manual for motor approvals information.

Warnings

The following warnings are for the setup, use, grounding, maintenance, and repair of this equipment. The exclamation point symbol alerts you to a general warning and the hazard symbols refer to procedure-specific risks. When these symbols appear in the body of this manual or on warning labels, refer back to these Warnings. Product-specific hazard symbols and warnings not covered in this section may appear throughout the body of this manual where applicable.

DANGER

SEVERE ELECTRIC SHOCK HAZARD

This equipment can be powered by more than 240V. Contact with this voltage will cause death or serious injury.

- Turn off and disconnect the power at the main switch before disconnecting any cables and before servicing equipment.
- This equipment must be grounded. Connect only to a grounded power source.
- All electrical wiring must be done by a qualified electrician and comply with all local codes and regulations.

WARNING

FIRE AND EXPLOSION HAZARD

Flammable fumes, such as solvent and paint fumes, in work area can ignite or explode. Paint or solvent flowing through the equipment can cause static sparking. To help prevent fire and explosion:

- Use equipment only in well-ventilated area.
- Eliminate all ignition sources such as pilot lights, cigarettes, portable electric lamps, and plastic drop cloths (potential static sparking).
- Ground all equipment in the work area. See **Grounding** instructions.
- Never spray or flush solvent at high pressure.
- Keep work area free of debris, including solvent, rags and gasoline.
- Do not plug or unplug power cords, or turn power or light switches on or off when flammable fumes are present.
- Use only grounded hoses.
- Hold gun firmly to side of grounded pail when triggering into pail. Do not use pail liners unless they are anti-static or conductive.
- **Stop operation immediately** if static sparking occurs or you feel a shock. Do not use equipment until you identify and correct the problem.
- Keep a working fire extinguisher in the work area.

Static charge may build up on plastic parts during cleaning and could discharge and ignite flammable vapors. To help prevent fire and explosion:

- Clean plastic parts only in well ventilated area.
- Do not clean with a dry cloth.
- Do not operate electrostatic guns in equipment work area.

WARNING

PRESSURIZED EQUIPMENT HAZARD

Fluid from the equipment, leaks, or ruptured components can splash in the eyes or on skin and cause serious injury.

- Follow the **Pressure Relief Procedure** when you stop spraying/dispensing and before cleaning, checking, or servicing equipment.
- Tighten all fluid connections before operating the equipment.
- Check hoses, tubes, and couplings daily. Replace worn or damaged parts immediately.

EQUIPMENT MISUSE HAZARD

Misuse can cause death or serious injury.

- Do not operate the unit when fatigued or under the influence of drugs or alcohol.
- Do not exceed the maximum working pressure or temperature rating of the lowest rated system component. See **Technical Data** in all equipment manuals.
- Use fluids and solvents that are compatible with equipment wetted parts. See **Technical Data** in all equipment manuals. Read fluid and solvent manufacturer's warnings. For complete information about your material, request Safety Data Sheet (SDS) from distributor or retailer.
- Turn off all equipment and follow the **Pressure Relief Procedure** when equipment is not in use.
- Check equipment daily. Repair or replace worn or damaged parts immediately with genuine manufacturer's replacement parts only.
- Do not alter or modify equipment. Alterations or modifications may void agency approvals and create safety hazards.
- Make sure all equipment is rated and approved for the environment in which you are using it.
- Use equipment only for its intended purpose. Call your distributor for information.
- Route hoses and cables away from traffic areas, sharp edges, moving parts, and hot surfaces.
- Do not kink or over bend hoses or use hoses to pull equipment.
- Keep children and animals away from work area.
- Comply with all applicable safety regulations.

MOVING PARTS HAZARD

Moving parts can pinch, cut or amputate fingers and other body parts.

- Keep clear of moving parts.
- Do not operate equipment with protective guards or covers removed.
- Pressurized equipment can start without warning. Before checking, moving, or servicing equipment, follow the **Pressure Relief Procedure** and disconnect all power sources.

TOXIC FLUID OR FUMES

Toxic fluids or fumes can cause serious injury or death if splashed in the eyes or on skin, inhaled, or swallowed.

- Read Safety Data Sheet (SDS) to know the specific hazards of the fluids you are using.
- Store hazardous fluid in approved containers, and dispose of it according to applicable guidelines.

WARNING	
	BURN HAZARD Equipment surfaces and fluid that's heated can become very hot during operation. To avoid severe burns: • Do not touch hot fluid or equipment.
	PERSONAL PROTECTIVE EQUIPMENT Wear appropriate protective equipment when in the work area to help prevent serious injury, including eye injury, hearing loss, inhalation of toxic fumes, and burns. Protective equipment includes but is not limited to: • Protective eyewear, and hearing protection. • Respirators, protective clothing, and gloves as recommended by the fluid and solvent manufacturer.

Installation

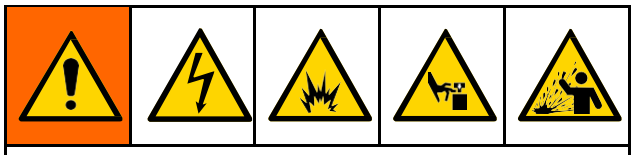

Installation of this equipment involves potentially hazardous procedures. Only trained and qualified personnel who have read and who understand the information in this manual should install this equipment.

Location

When selecting the location for the equipment, keep the following in mind:

- There must be sufficient space on all sides of the equipment for installation, operator access, maintenance, and air circulation.
- Ensure that the mounting surface and mounting hardware are strong enough to support the weight of the equipment, fluid, hoses, and stress caused during operation.
- There must be a start/stop control (C) within easy reach of the equipment. See Typical Installation, Figure 1.

Mount the Pump

See Mounting Hole Patterns, page 31.

Stand Mount

1. Secure the stand to the floor with M19 (5/8 in.) bolts. Use bolts that engage at least 152 mm (6 in.) into the concrete floor to prevent the pump from tipping.
2. Level the pump as required, using shims.

Wall Mount

1. Drill four 7/16 in. (11 mm) holes using the bracket as a template. Use any of the three mounting hole groupings in the bracket. See Mounting Hole Patterns, page 31.
2. Bolt the bracket securely to the wall using bolts and washers designed to hold in the wall's construction.
3. Attach the pump assembly to the mounting bracket.

Power Requirements

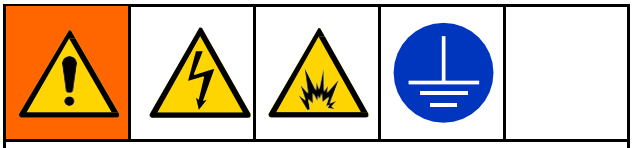

Improper wiring may cause electric shock or other serious injury if work is not performed properly.

- This equipment must be grounded. Connect only to a grounded power source.
- All electrical wiring must be done by a qualified electrician and comply with all local codes and regulations.

See table below for power requirements. The system requires a dedicated circuit protected with a circuit breaker.

Table 3 Power Specifications

Model	Voltage	Phase	Hz	Power
ECx1xx ECx2xx ECx5xx ECx6xx	100–250 Vac	1	50/60	1.4 kVA
ECx3xx ECx4xx ECx7xx ECx8xx	200–250 Vac	1	50/60	2.9 kVA
ECxAxx ECxBxx ECxExx ECxFxx	380–480 Vac	3	50/60	1.5 kVA
ECxCxx ECxDxx ECxGxx ECxHxx	380–480 Vac	3	50/60	3.0 kVA

Hazardous Area Cabling and Conduit Requirements

Explosion Proof

All electrical wiring in the hazardous area must be encased in Class I, Division I, Group D approved explosion-proof conduit. Follow all National, State, and Local electric codes.

A conduit seal (D) is required within 18 in. (457 mm) of the motor for the US and Canada. See Fig. 3.

All cables must be rated at 70°C (158°F).

Flame Proof (ATEX)

Use appropriate conduit, connectors, and cable glands rated for ATEX II 2 G. Follow all National, State, and Local electric codes.

All cable glands and cables must be rated at 70°C (158°F).

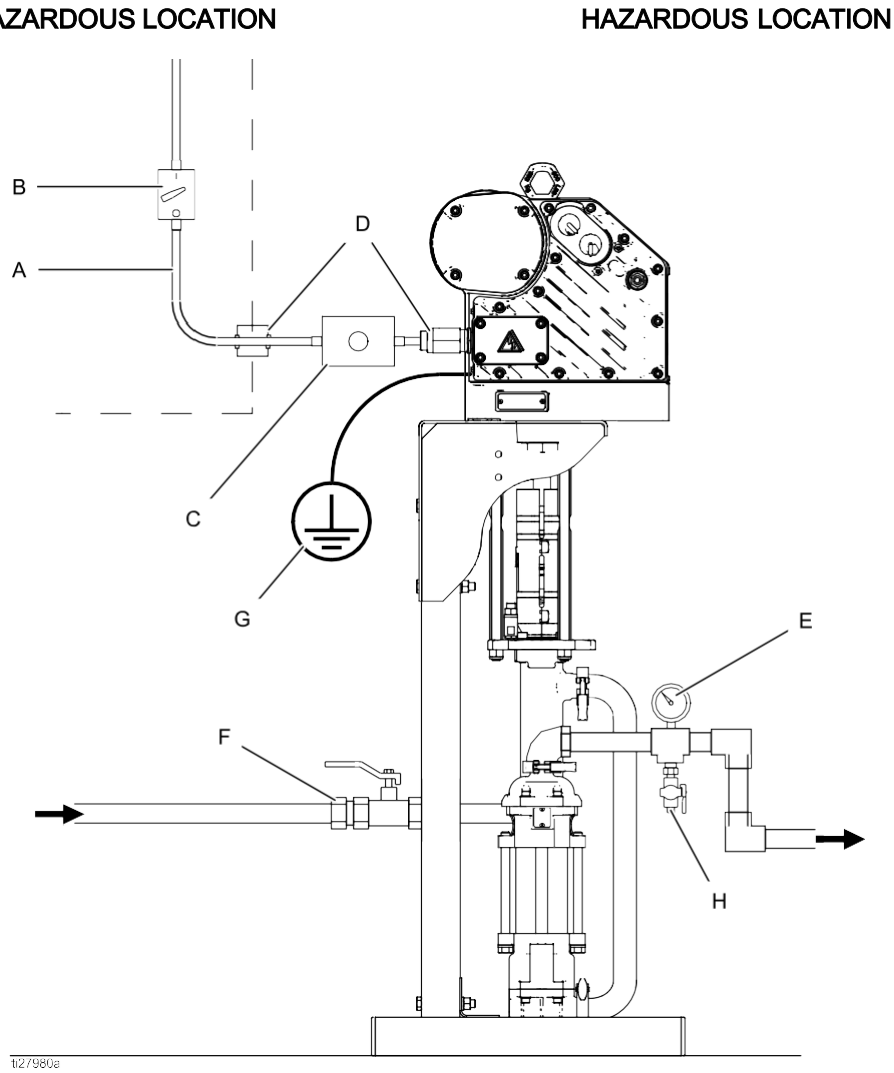

Figure 1 Typical Installation

Key for Fig. 1	
A	Electrical Supply (must be sealed conduit approved for use in hazardous locations)
B	Disconnect, with lock
C	Start/Stop Control (must be approved for use in hazardous locations)
D	Explosion Proof Conduit Seal. Required within 18 in. (457 mm) of the motor for the US and Canada.

Key for Fig. 1	
E	Fluid Pressure Gauge
F	Fluid Shutoff Valve
G	Pump Ground Wire. Two ground terminals are provided if local code requires redundant grounding connections.
H	Fluid Drain Valve

Connect the Supply Wiring

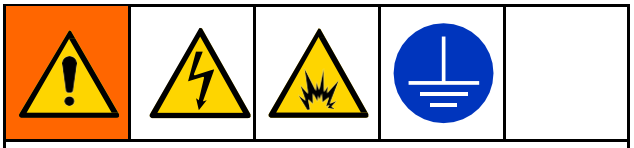

Improper wiring may cause electric shock or other serious injury if work is not performed properly.

- This equipment must be grounded. Connect only to a grounded power source.
- All electrical wiring must be done by a qualified electrician and comply with all local codes and regulations.

1. Ensure that the disconnect (B, Fig. 2) is shut off and locked out.

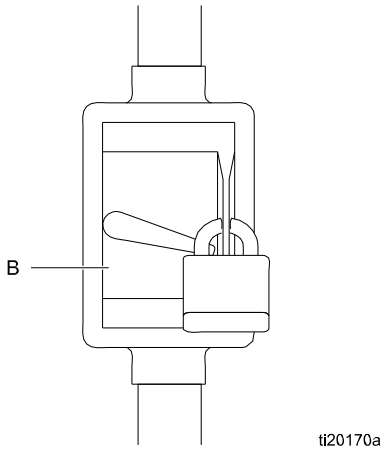

Figure 2 Locked Out Disconnect

2. See Figs. 3 and 4. Install a start/stop control (C) in the electrical supply line (A), within easy reach of the equipment. The start/stop control must be approved for use in hazardous locations.

3. Open the electrical compartment (S) on the motor.

4. Bring the supply wires into the electrical compartment through the 3/4–14 npt(f) inlet port. Connect the wires to the terminals, as shown in Figs. 3 and 4. Torque the terminal nuts to 15 in-lb (1.7 N-m) maximum. **Do not over-torque.**

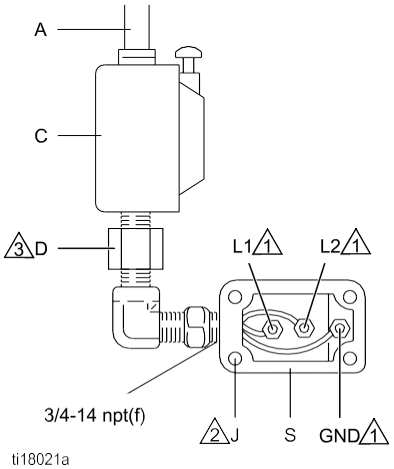

Figure 3 Connect the Power Wires, Single Phase

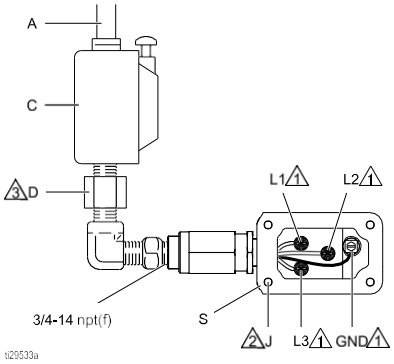

Figure 4 Connect the Power Wires, Three Phase

Notes for Figs. 3 and 4	
1	Tighten all terminal nuts to 15 in-lb (1.7 N-m) maximum. **Do not over-torque.**
2	Tighten cover screws to 15 ft-lb (20.3 N•m).
3	A conduit seal (D) is required within 18 in. (457 mm) of the motor for the US and Canada.

5. Close the electrical compartment. Torque the cover screws to 15 ft-lb (20.3 N•m).

Grounding

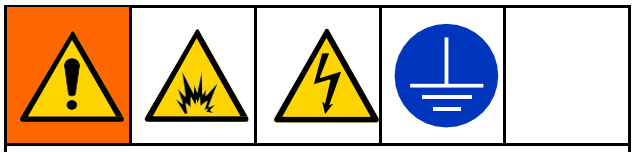

This equipment must be grounded to reduce the risk of static sparking and electric shock. Electric or static sparking can cause fumes to ignite or explode. Improper grounding can cause electric shock. Grounding provides an escape wire for the electric current.

1. Connect the supply ground wire in the electrical compartment as shown in Figs. 3 and 4.
2. Connect a ground wire as shown in Fig. 5. Loosen the ground screw and attach a ground wire (Y, Graco part 222011, not supplied). Tighten the ground screw securely. Connect the other end of the ground wire to a true earth ground.

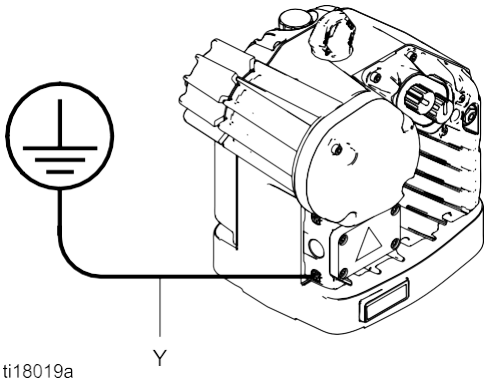

Figure 5 Ground Wire

NOTE: Advanced models require installation of a control module. All pumps connected to a common control module must be grounded to the same ground point. Different ground points (unequal potential) may cause current to flow through component cables, causing incorrect signals.

Pump	Control Module
ECx2xx, ECx4xx	24P822
ECx6xx, ECx8xx	24X599
ECxBxx, ECxDxx	17V232
ECxFxx, ECxHxx	17V233

3. **Fluid hoses:** Use only electrically conductive hoses with a maximum of 500 ft. (150 m) combined hose length to ensure grounding continuity. Check the electrical resistance of hoses. If total resistance to ground exceeds 25 megohms, replace hose immediately
4. **Fluid supply container:** Follow your local code.
5. **Solvent pails used when flushing:** Follow local code. Use only conductive metal pails, placed on a grounded surface. Do not place the pail on a non-conductive surface, such as paper or cardboard, which interrupts grounding continuity.
6. **To maintain grounding continuity when flushing or relieving pressure:** Hold metal part of the spray gun or valve firmly to the side of a grounded metal pail, then trigger the gun or open the valve.

Fluid Line Accessories

Install the following accessories in the order shown in Fig. 1, using adapters as necessary. All fluid lines and accessories must be rated to the maximum working pressure of the pump. See Technical Data, page 37.

- **Fluid drain valve (H):** required in your system, to relieve fluid pressure in the hose and circulation system.
- **Fluid pressure gauge (E):** for more precise adjustment of the fluid pressure.
- **Fluid shutoff valve (F):** shuts off fluid flow.

Check the Oil Level Before Using the Equipment

The motor is pre-filled with oil. Before using the equipment, replace the shipping plug with the vented fill cap (P) that is included with the motor.

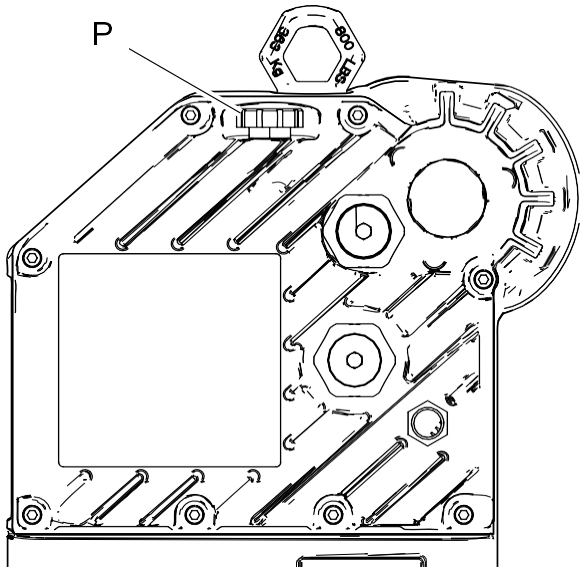

Figure 6 Sightglass and Oil Fill Cap

Flush Before Using Equipment

The pump fluid section was tested with lightweight oil, which is left in the fluid passages to protect parts. To avoid contaminating your fluid with oil, flush the equipment with a compatible solvent before using the equipment.

NOTICE

The maximum fluid inlet pressure is 15 psi (0.1 MPa, 1.0 bar). Damage to the bellows may occur if you exceed this pressure. Do not use another pump or checking device to supply the bellows pump.

Control Module Accessory

The Control Module Accessory is required with Advanced E-Flo DC motors to provide the interface for users to enter selections and view information related to setup and operation. See the Control Module Accessory Kit manual for installation and operation information.

Operation

Startup

To operate the pump, follow the Startup instructions for the Basic or Advanced motor in the Motor manual. The Advanced E-Flo DC motors require installation of a Control Module Accessory Kit (see table) to provide the interface for users to enter selections and view information related to setup and operation. See the Control Module Accessory Kit manual 3A2527 for installation and operation information.

Pump	Control Module
ECx2xx, ECx4xx	24P822
ECx6xx, ECx8xx	24X599
ECxBxx, ECxDxx	17V232
ECxFxx, ECxHxx	17V233

Run the pump at a slow speed until the fluid lines are primed and all air is forced out of the system.

Shutdown

Follow the Pressure Relief Procedure, page 15.

Pressure Relief Procedure

Follow the Pressure Relief Procedure whenever you see this symbol.

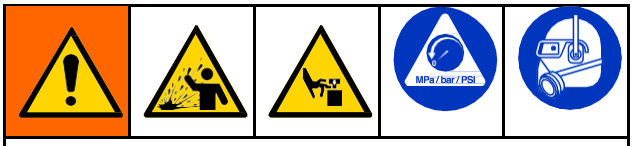

This equipment stays pressurized until pressure is manually relieved. To help prevent serious injury from splashing fluid and moving parts, follow the Pressure Relief Procedure when you stop spraying and before cleaning, checking, or servicing the equipment.

1. Disengage the start/stop control (C). See Fig. 1.
2. Shut off and lock out the disconnect (B).
3. Open the fluid drain valve (H), having a waste container ready to catch drainage. Leave open until you are ready to pressurize the system again.

Maintenance

See the motor manual for required motor maintenance procedures.

Preventive Maintenance Schedule

The operating conditions of your particular system determine how often maintenance is required. Establish a preventive maintenance schedule by recording when and what kind of maintenance is needed, and then determine a regular schedule for checking your system.

Flushing

To avoid fire and explosion, always ground equipment and waste container. To avoid static sparking and injury from splashing, always flush at the lowest possible pressure.

- Flush before changing fluids, before fluid can dry in the equipment, at the end of the day, before storing, and before repairing equipment.
- Flush at the lowest pressure possible. Check connectors for leaks and tighten as necessary.
- Flush with a fluid that is compatible with the fluid being dispensed and the equipment wetted parts.

Change the Oil

NOTE: Change the oil after a break-in period of 200,000–300,000 cycles. After the break-in period, change the oil once a year.

1. See Fig. 7. Place a minimum 2 quart (1.9 liter) container under the oil drain port. Remove the oil drain plug (25). Allow all oil to drain from the motor.
2. Reinstall the oil drain plug (25). Torque to 25–30 ft-lb (34–40 N•m).
3. See Fig. 8. Open the fill cap (P) and add Graco Part No. 16W645 ISO 220 silicone-free synthetic gear oil. Check the oil level in the sight glass (K). Fill until the oil level is near the halfway point of the sight glass. The oil capacity is approximately 1.5 quarts (1.4 liters). **Do not overfill.**
4. Reinstall the fill cap.

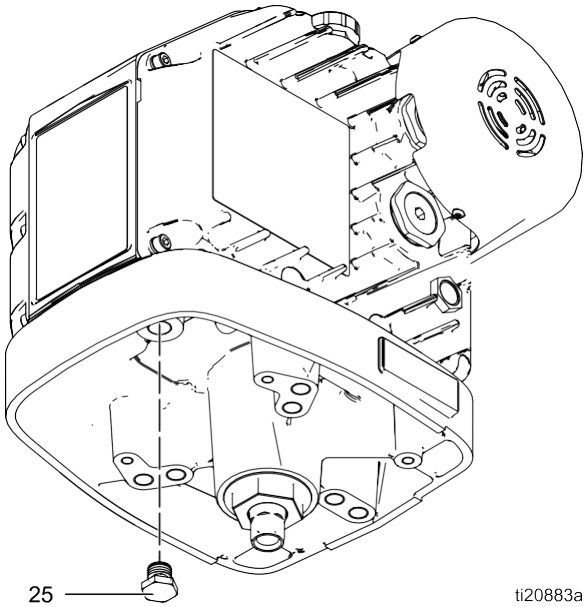

Figure 7 Oil Drain Plug

Check the Oil Level

See Fig. 8. Check the oil level in the sight glass (K). The oil level should be near the halfway point of the sight glass when the unit is not running. If low, open the fill cap (P) and add Graco Part No. 16W645 ISO 220 silicone-free synthetic gear oil as required. The oil capacity is approximately 1.5 quarts (1.4 liters). **Do not overfill.**

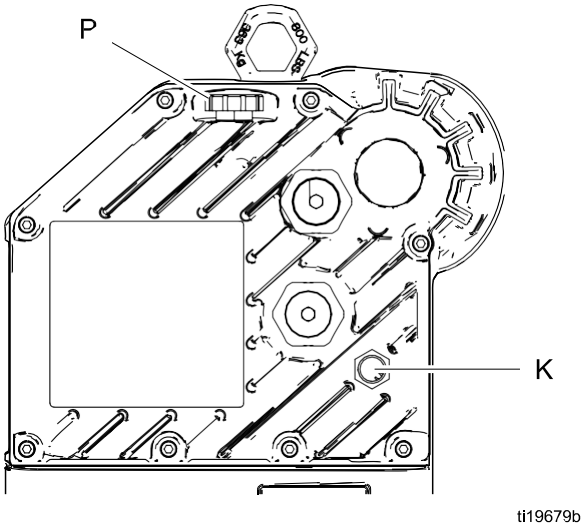

Figure 8 Sightglass and Oil Fill Cap

Troubleshooting

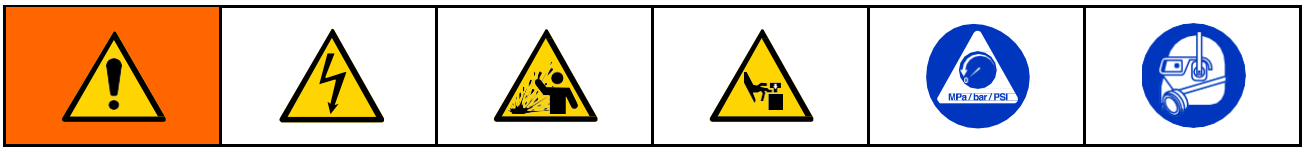

NOTE: Check all possible remedies before disassembling the pump.

NOTE: The LED on the motor will blink if an error is detected. See **Error Code Troubleshooting** in the motor manual for further information.

Problem	Cause	Solution
Pump output low on both strokes.	Inadequate power supply.	See Power Requirements, page 10.
	Exhausted fluid supply.	Refill and reprime pump.
	Clogged fluid outlet line, valves, etc.	Clear.
	Worn piston packing.	Replace. See lower manual.
Pump output low on only one stroke.	Held open or worn ball check valves.	Check and repair. See lower manual.
	Worn piston packing.	Replace. See lower manual.
No output.	Improperly installed ball check valves.	Check and repair. See lower manual.
Pump operates erratically.	Exhausted fluid supply.	Refill and reprime pump.
	Held open or worn ball check valves.	Check and repair. See lower manual.
	Worn piston packing.	Replace. See lower manual.
Pump will not operate.	Inadequate power supply.	See Power Requirements, page 10.
	Exhausted fluid supply.	Refill and reprime pump.
	Clogged fluid outlet line, valves, etc.	Clear.
	Fluid dried on piston rod.	Disassemble and clean pump. See lower manual. In future, stop pump at bottom of stroke.

Repair

Disassembly

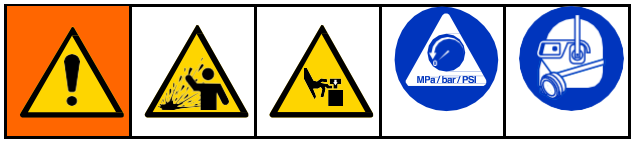

1. Stop the pump at the bottom of its stroke.
2. Relieve the pressure. Follow the Pressure Relief Procedure, page 15.
3. Disconnect the hoses from the lower and plug the ends to prevent fluid contamination.
4. **Models with Sealed Lowers**: Remove the 2-piece shield (12) by inserting a screwdriver straight into the slot, and using it as a lever to release the tab. Repeat for all tabs. **Do not** use the screwdriver to pry the shields apart.

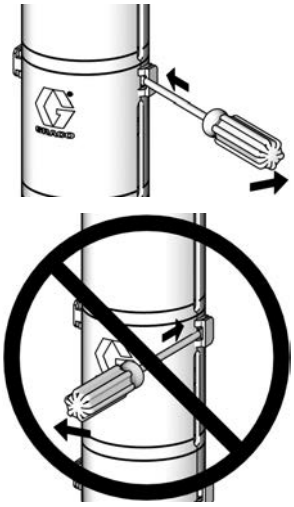

5. Loosen the coupling nut (11) and remove the collars (10). Remove the coupling nut from the piston rod (R). Unscrew the locknuts (8) from the tie rods (6). Separate the motor (3) and lower (7). See Fig. 9.
6. To repair the lower, see the lower manual.
7. There are no user-serviceable parts in the motor. Contact your Graco representative for assistance.

Reassembly

1. If the coupling adapter (9) and tie rods (6) have not been disassembled from the motor (3), skip to Step 2.
   If the coupling adapter (9) and tie rods (6) have been disassembled from the motor (3), follow these steps:
   a. Screw the tie rods (6) into the motor (3) and torque to 50-60 ft-lb (68-81 N•m). See Fig. 9.
   b. Apply blue thread locker to the coupling adapter (9).
   c. Screw the coupling adapter (9) into the motor shaft and torque to 90–100 ft-lb (122–135 N•m).
   d. Continue to step 2.
2. Assemble the coupling nut (11) over the piston rod (R). See Fig. 9.
3. Orient the lower (7) to the motor (3). Position the lower on the tie rods (6).
4. If you are reusing lock nuts (8) and the nylon of the lock nut is worn or cut, add blue thread locker to the tie rod threads.
5. Screw the lock nuts (8) onto the tie rods (6). Leave the lock nuts (8) loose enough to allow the lower to move so that it can be aligned correctly.

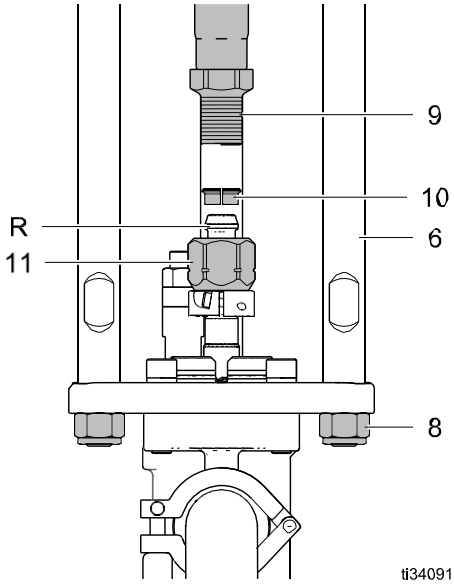

Figure 9
Coupling Nut Over Piston Rod

6. Insert the collars (10) into the coupling nut (11). Tighten the coupling nut (11) onto the coupling adapter (9) and torque to 90–100 ft-lb (122–135 N•m) to align the motor shaft with the piston rod.

7. Tighten the lock nuts (8) and torque to 50-60 ft-lb (68-81 N•m).
8. **Models with Sealed Lowers:** Install the shields (12) by engaging the bottom lips with the groove in the top plate. Snap the two shields together.

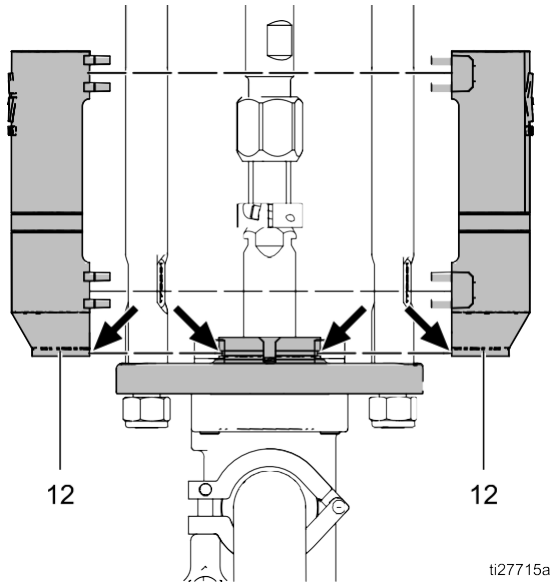

Figure 10 Pump Assembly: Models with Sealed Lowers

9. Flush and test the pump before reinstalling it in the system. Connect hoses and flush the pump. While it is pressurized, check for smooth operation and leaks. Adjust or repair as necessary before reinstalling in the system. Reconnect the pump ground wire before operating.

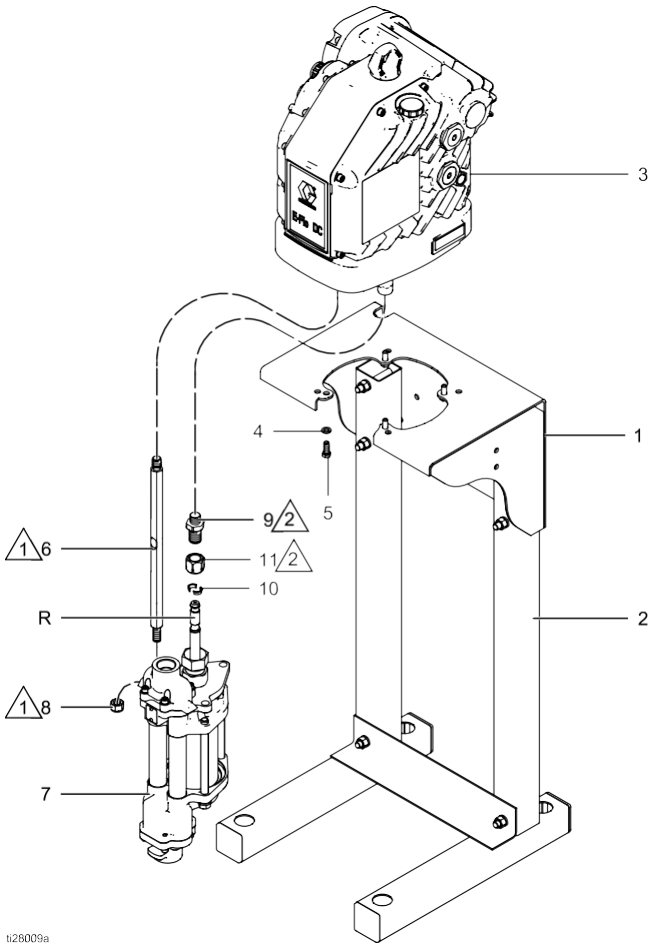

Figure 11 Pump Assembly: Lower with Open Wet Cup Shown

Notes	
1	Torque to 50–60 ft-lb (68–81 N•m).
2	Torque to 90–100 ft-lb (122–135 N•m).

Parts

Pump Assembly

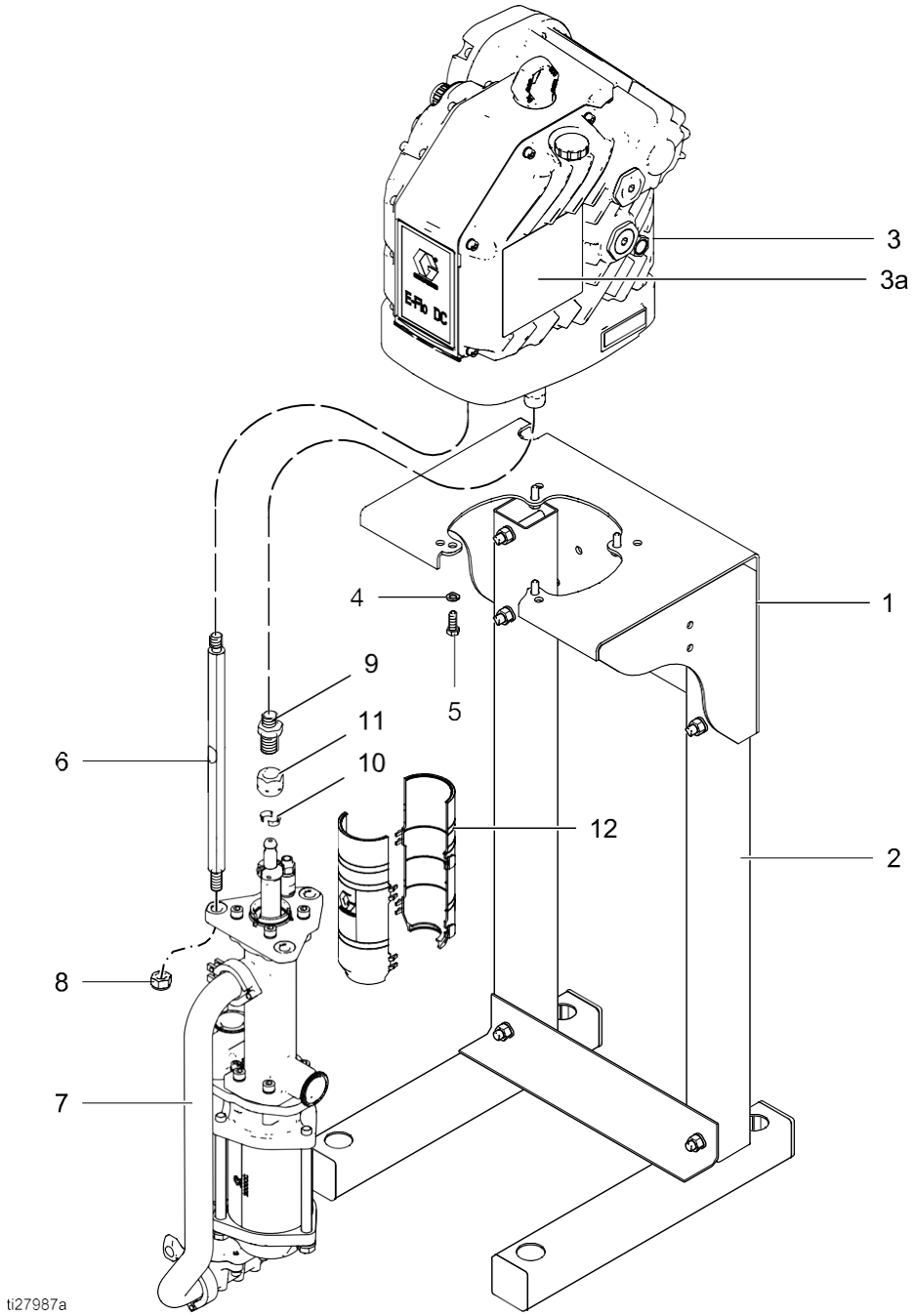

Ref	Part	Description	Qty.
1		KIT, mounting bracket, pump; includes items 4 and 5; see manual 311619	
	255143	for Models ECxxx1 or ECxxx2	1
	Not used	for Models ECxxx0	0
2		STAND, floor	
	256193	for Models ECxxx0	1
	Not used	for Models ECxxx1 or ECxxx2	0
3	See Pump Matrix, page 23.	MOTOR; Basic or Advanced; see motor manual; includes items 3a and 3b	1
3a. A	16M130	LABEL, warning	1
3b	16W645	OIL, gear, synthetic; ISO 220 silicone-free; 1 quart (0.95 liter); not shown	2
4		WASHER	
	100133	for Models ECxxx1 or ECxxx2	4
	Not used	for Models ECxxx0	0
5	See	BOLT	
	100101	for Models ECxxx1 or ECxxx2	4
	Not used	for Models ECxxx0	0
6		ROD, tie	3
	15G924	for Models ECxx5x or ECxx6x,	
	16X771	for Models ECxx4x, ECxxCx or EC7x4x	
7	See Pump Matrix, page 23.	PUMP, displacement; see lower manual	1
8	108683	NUT, lock, hex	3
9	15H369	ADAPTER	1
10	184128	COLLAR, coupling	2
11	17F000	NUT, coupling	1
12	24F251	KIT, shield, coupler (includes 2 pieces); used on pumps with sealed lowers	1

. A Replacement Danger and Warning labels, tags, and cards are available at no cost.

Pump Matrix

Pump Model	Pump Series	Motor (Ref. 3)	Lower Pump (Ref. 7)
EC1140	A	EM0011	17K656
EC1141	A	EM0011	17K656
EC1142	A	EM0011	17K656
EC1150	A	EM0011	17K668
EC1151	A	EM0011	17K668
EC1152	A	EM0011	17K668
EC1160	A	EM0011	17K664
EC1161	A	EM0011	17K664
EC1162	A	EM0011	17K664
EC1240	A	EM0012	17K656
EC1241	A	EM0012	17K656
EC1242	A	EM0012	17K656
EC1250	A	EM0012	17K668
EC1251	A	EM0012	17K668
EC1252	A	EM0012	17K668
EC1260	A	EM0012	17K664
EC1261	A	EM0012	17K664
EC1262	A	EM0012	17K664
EC1540	A	EM0013	17K656
EC1541	A	EM0013	17K656
EC1542	A	EM0013	17K656
EC1550	A	EM0013	17K668
EC1551	A	EM0013	17K668
EC1552	A	EM0013	17K668
EC1560	A	EM0013	17K664
EC1561	A	EM0013	17K664
EC1562	A	EM0013	17K664
EC1640	A	EM0014	17K656
EC1641	A	EM0014	17K656
EC1642	A	EM0014	17K656
EC1650	A	EM0014	17K668
EC1651	A	EM0014	17K668
EC1652	A	EM0014	17K668
EC1660	A	EM0014	17K664

Pump Model	Pump Series	Motor (Ref. 3)	Lower Pump (Ref. 7)
EC1661	A	EM0014	17K664
EC1662	A	EM0014	17K664
EC2140	A	EM0011	17K657
EC2141	A	EM0011	17K657
EC2142	A	EM0011	17K657
EC2150	A	EM0011	17K669
EC2151	A	EM0011	17K669
EC2152	A	EM0011	17K669
EC2160	A	EM0011	17K665
EC2161	A	EM0011	17K665
EC2162	A	EM0011	17K665
EC2240	A	EM0012	17K657
EC2241	A	EM0012	17K657
EC2242	A	EM0012	17K657
EC2250	A	EM0012	17K669
EC2251	A	EM0012	17K669
EC2252	A	EM0012	17K669
EC2260	A	EM0012	17K665
EC2261	A	EM0012	17K665
EC2262	A	EM0012	17K665
EC2340	A	EM0021	17K657
EC2341	A	EM0021	17K657
EC2342	A	EM0021	17K657
EC2350	A	EM0021	17K669
EC2351	A	EM0021	17K669
EC2352	A	EM0021	17K669
EC2360	A	EM0021	17K665
EC2361	A	EM0021	17K665
EC2362	A	EM0021	17K665
EC2440	A	EM0022	17K657
EC2441	A	EM0022	17K657
EC2442	A	EM0022	17K657
EC2450	A	EM0022	17K669
EC2451	A	EM0022	17K669

Pump Model	Pump Series	Motor (Ref. 3)	Lower Pump (Ref. 7)
EC2452	A	EM0022	17K669
EC2460	A	EM0022	17K665
EC2461	A	EM0022	17K665
EC2462	A	EM0022	17K665
EC2540	A	EM0013	17K657
EC2541	A	EM0013	17K657
EC2542	A	EM0013	17K657
EC2550	A	EM0013	17K669
EC2551	A	EM0013	17K669
EC2552	A	EM0013	17K669
EC2560	A	EM0013	17K665
EC2561	A	EM0013	17K665
EC2562	A	EM0013	17K665
EC2640	A	EM0014	17K657
EC2641	A	EM0014	17K657
EC2642	A	EM0014	17K657
EC2650	A	EM0014	17K669
EC2651	A	EM0014	17K669
EC2652	A	EM0014	17K669
EC2660	A	EM0014	17K665
EC2661	A	EM0014	17K665
EC2662	A	EM0014	17K665
EC26C1	A	EM0014	25N404
EC2740	A	EM0023	17K657
EC2741	A	EM0023	17K657
EC2742	A	EM0023	17K657
EC2750	A	EM0023	17K669
EC2751	A	EM0023	17K669
EC2752	A	EM0023	17K669
EC2760	A	EM0023	17K665
EC2761	A	EM0023	17K665
EC2762	A	EM0023	17K665
EC2840	A	EM0024	17K657
EC2841	A	EM0024	17K657
EC2842	A	EM0024	17K657

Pump Model	Pump Series	Motor (Ref. 3)	Lower Pump (Ref. 7)
EC2851	A	EM0024	17K669
EC2852	A	EM0024	17K669
EC2860	A	EM0024	17K665
EC2861	A	EM0024	17K665
EC2862	A	EM0024	17K665
EC28C1	A	EM0024	25N404
EC3340	A	EM0021	17K658
EC3341	A	EM0021	17K658
EC3342	A	EM0021	17K658
EC3350	A	EM0021	17K670
EC3351	A	EM0021	17K670
EC3352	A	EM0021	17K670
EC3360	A	EM0021	17K666
EC3361	A	EM0021	17K666
EC3362	A	EM0021	17K666
EC3440	A	EM0022	17K658
EC3441	A	EM0022	17K658
EC3442	A	EM0022	17K658
EC3450	A	EM0022	17K670
EC3451	A	EM0022	17K670
EC3452	A	EM0022	17K670
EC3460	A	EM0022	17K666
EC3461	A	EM0022	17K666
EC3462	A	EM0022	17K666
EC3740	A	EM0023	17K658
EC3741	A	EM0023	17K658
EC3742	A	EM0023	17K658
EC3750	A	EM0023	17K670
EC3751	A	EM0023	17K670
EC3752	A	EM0023	17K670
EC3760	A	EM0023	17K666
EC3761	A	EM0023	17K666
EC3762	A	EM0023	17K666
EC3840	A	EM0024	17K658
EC3841	A	EM0024	17K658

Pump Model	Pump Series	Motor (Ref. 3)	Lower Pump (Ref. 7)
EC3850	A	EM0024	17K670
EC3851	A	EM0024	17K670
EC3852	A	EM0024	17K670
EC3860	A	EM0024	17K666
EC3861	A	EM0024	17K666
EC3862	A	EM0024	17K666
EC4340	A	EM0021	17K659
EC4341	A	EM0021	17K659
EC4342	A	EM0021	17K659
EC4350	A	EM0021	17K671
EC4351	A	EM0021	17K671
EC4352	A	EM0021	17K671
EC4360	A	EM0021	17K667
EC4361	A	EM0021	17K667
EC4362	A	EM0021	17K667
EC4440	A	EM0022	17K659
EC4441	A	EM0022	17K659
EC4442	A	EM0022	17K659
EC4450	A	EM0022	17K671
EC4451	A	EM0022	17K671
EC4452	A	EM0022	17K671
EC4460	A	EM0022	17K667
EC4461	A	EM0022	17K667
EC4462	A	EM0022	17K667
EC4740	A	EM0023	17K659
EC4741	A	EM0023	17K659
EC4742	A	EM0023	17K659
EC4750	A	EM0023	17K671
EC4751	A	EM0023	17K671
EC4752	A	EM0023	17K671
EC4760	A	EM0023	17K667
EC4761	A	EM0023	17K667
EC4762	A	EM0023	17K667
EC4840	A	EM0024	17K659
EC4841	A	EM0024	17K659

Pump Model	Pump Series	Motor (Ref. 3)	Lower Pump (Ref. 7)
EC4842	A	EM0024	17K659
EC4850	A	EM0024	17K671
EC4851	A	EM0024	17K671
EC4852	A	EM0024	17K671
EC4860	A	EM0024	17K667
EC4861	A	EM0024	17K667
EC4862	A	EM0024	17K667
EC1A40	A	EM1011	17K656
EC1A41	A	EM1011	17K656
EC1A42	A	EM1011	17K656
EC1A50	A	EM1011	17K668
EC1A51	A	EM1011	17K668
EC1A52	A	EM1011	17K668
EC1A60	A	EM1011	17K664
EC1A61	A	EM1011	17K664
EC1A62	A	EM1011	17K664
EC1B40	A	EM1012	17K656
EC1B41	A	EM1012	17K656
EC1B42	A	EM1012	17K656
EC1B50	A	EM1012	17K668
EC1B51	A	EM1012	17K668
EC1B52	A	EM1012	17K668
EC1B60	A	EM1012	17K664
EC1B61	A	EM1012	17K664
EC1B62	A	EM1012	17K664
EC1E40	A	EM1013	17K656
EC1E41	A	EM1013	17K656
EC1E42	A	EM1013	17K656
EC1E50	A	EM1013	17K668
EC1E51	A	EM1013	17K668
EC1E52	A	EM1013	17K668
EC1E60	A	EM1013	17K664
EC1E61	A	EM1013	17K664
EC1E62	A	EM1013	17K664
EC1F40	A	EM1014	17K656

Pump Model	Pump Series	Motor (Ref. 3)	Lower Pump (Ref. 7)
EC1F41	A	EM1014	17K656
EC1F42	A	EM1014	17K656
EC1F50	A	EM1014	17K668
EC1F51	A	EM1014	17K668
EC1F52	A	EM1014	17K668
EC1F60	A	EM1014	17K664
EC1F61	A	EM1014	17K664
EC1F62	A	EM1014	17K664
EC2A40	A	EM1011	17K657
EC2A41	A	EM1011	17K657
EC2A42	A	EM1011	17K657
EC2A50	A	EM1011	17K669
EC2A51	A	EM1011	17K669
EC2A52	A	EM1011	17K669
EC2A60	A	EM1011	17K665
EC2A61	A	EM1011	17K665
EC2A62	A	EM1011	17K665
EC2B40	A	EM1012	17K657
EC2B41	A	EM1012	17K657
EC2B42	A	EM1012	17K657
EC2B50	A	EM1012	17K669
EC2B51	A	EM1012	17K669
EC2B52	A	EM1012	17K669
EC2B60	A	EM1012	17K665
EC2B61	A	EM1012	17K665
EC2B62	A	EM1012	17K665
EC2C40	A	EM1021	17K657
EC2C41	A	EM1021	17K657
EC2C42	A	EM1021	17K657
EC2C50	A	EM1021	17K669
EC2C51	A	EM1021	17K669
EC2C52	A	EM1021	17K669
EC2C60	A	EM1021	17K665
EC2C61	A	EM1021	17K665
EC2C62	A	EM1021	17K665

Pump Model	Pump Series	Motor (Ref. 3)	Lower Pump (Ref. 7)
EC2D40	A	EM1022	17K657
EC2D41	A	EM1022	17K657
EC2D42	A	EM1022	17K657
EC2D50	A	EM1022	17K669
EC2D51	A	EM1022	17K669
EC2D52	A	EM1022	17K669
EC2D60	A	EM1022	17K665
EC2D61	A	EM1022	17K665
EC2D62	A	EM1022	17K665
EC2E40	A	EM1013	17K657
EC2E41	A	EM1013	17K657
EC2E42	A	EM1013	17K657
EC2E50	A	EM1013	17K669
EC2E51	A	EM1013	17K669
EC2E52	A	EM1013	17K669
EC2E60	A	EM1013	17K665
EC2E61	A	EM1013	17K665
EC2E62	A	EM1013	17K665
EC2F40	A	EM1014	17K657
EC2F41	A	EM1014	17K657
EC2F42	A	EM1014	17K657
EC2F50	A	EM1014	17K669
EC2F51	A	EM1014	17K669
EC2F52	A	EM1014	17K669
EC2F60	A	EM1014	17K665
EC2F61	A	EM1014	17K665
EC2F62	A	EM1014	17K665
EC2FC1	A	EM1014	25N404
EC2G40	A	EM1023	17K657
EC2G41	A	EM1023	17K657
EC2G42	A	EM1023	17K657
EC2G50	A	EM1023	17K669
EC2G51	A	EM1023	17K669
EC2G52	A	EM1023	17K669
EC2G60	A	EM1023	17K665

Pump Model	Pump Series	Motor (Ref. 3)	Lower Pump (Ref. 7)
EC2G62	A	EM1023	17K665
EC2H40	A	EM1024	17K657
EC2H41	A	EM1024	17K657
EC2H42	A	EM1024	17K657
EC2H50	A	EM1024	17K669
EC2H51	A	EM1024	17K669
EC2H52	A	EM1024	17K669
EC2HC1	A	EM1024	25N404
EC2H60	A	EM1024	17K665
EC2H61	A	EM1024	17K665
EC2H62	A	EM1024	17K665
EC3C40	A	EM1021	17K658
EC3C41	A	EM1021	17K658
EC3C42	A	EM1021	17K658
EC3C50	A	EM1021	17K670
EC3C51	A	EM1021	17K670
EC3C52	A	EM1021	17K670
EC3C60	A	EM1021	17K666
EC3C61	A	EM1021	17K666
EC3C62	A	EM1021	17K666
EC3D40	A	EM1022	17K658
EC3D41	A	EM1022	17K658
EC3D42	A	EM1022	17K658
EC3D50	A	EM1022	17K670
EC3D51	A	EM1022	17K670
EC3D52	A	EM1022	17K670
EC3D60	A	EM1022	17K666
EC3D61	A	EM1022	17K666
EC3D62	A	EM1022	17K666
EC3G40	A	EM1023	17K658
EC3G41	A	EM1023	17K658
EC3G42	A	EM1023	17K658
EC3G50	A	EM1023	17K670
EC3G51	A	EM1023	17K670
EC3G52	A	EM1023	17K670

Pump Model	Pump Series	Motor (Ref. 3)	Lower Pump (Ref. 7)
EC3G61	A	EM1023	17K666
EC3G62	A	EM1023	17K666
EC3H40	A	EM1024	17K658
EC3H41	A	EM1024	17K658
EC3H42	A	EM1024	17K658
EC3H50	A	EM1024	17K670
EC3H51	A	EM1024	17K670
EC3H52	A	EM1024	17K670
EC3H60	A	EM1024	17K666
EC3H61	A	EM1024	17K666
EC3H62	A	EM1024	17K666
EC4C40	A	EM1021	17K659
EC4C41	A	EM1021	17K659
EC4C42	A	EM1021	17K659
EC4C50	A	EM1021	17K671
EC4C51	A	EM1021	17K671
EC4C52	A	EM1021	17K671
EC4C60	A	EM1021	17K667
EC4C61	A	EM1021	17K667
EC4C62	A	EM1021	17K667
EC4D40	A	EM1022	17K659
EC4D41	A	EM1022	17K659
EC4D42	A	EM1022	17K659
EC4D50	A	EM1022	17K671
EC4D51	A	EM1022	17K671
EC4D52	A	EM1022	17K671
EC4D60	A	EM1022	17K667
EC4D61	A	EM1022	17K667
EC4D62	A	EM1022	17K667
EC4G40	A	EM1023	17K659
EC4G41	A	EM1023	17K659
EC4G42	A	EM1023	17K659
EC4G50	A	EM1023	17K671
EC4G51	A	EM1023	17K671
EC4G52	A	EM1023	17K671

Pump Model	Pump Series	Motor (Ref. 3)	Lower Pump (Ref. 7)
EC4G60	A	EM1023	17K667
EC4G61	A	EM1023	17K667
EC4G62	A	EM1023	17K667
EC4H40	A	EM1024	17K659
EC4H41	A	EM1024	17K659
EC4H42	A	EM1024	17K659
EC4H50	A	EM1024	17K671
EC4H51	A	EM1024	17K671
EC4H52	A	EM1024	17K671
EC4H60	A	EM1024	17K667
EC4H61	A	EM1024	17K667
EC4H62	A	EM1024	17K667

Pump Model	Pump Series	Motor (Ref. 3)	Lower Pump (Ref. 7)
EC7C40	A	EM1021	17Z387
EC7C41	A	EM1021	17Z387
EC7C43	A	EM1021	17Z387
EC7D40	A	EM1022	17Z387
EC7D41	A	EM1022	17Z387
EC7D42	A	EM1022	17Z387
EC7G40	A	EM1023	17Z387
EC7G41	A	EM1023	17Z387
EC7G42	A	EM1023	17Z387
EC7H40	A	EM1024	17Z387
EC7H41	A	EM1024	17Z387
EC7H42	A	EM1024	17Z387

Dimensions

Pump with Sealed 4–Ball Lower

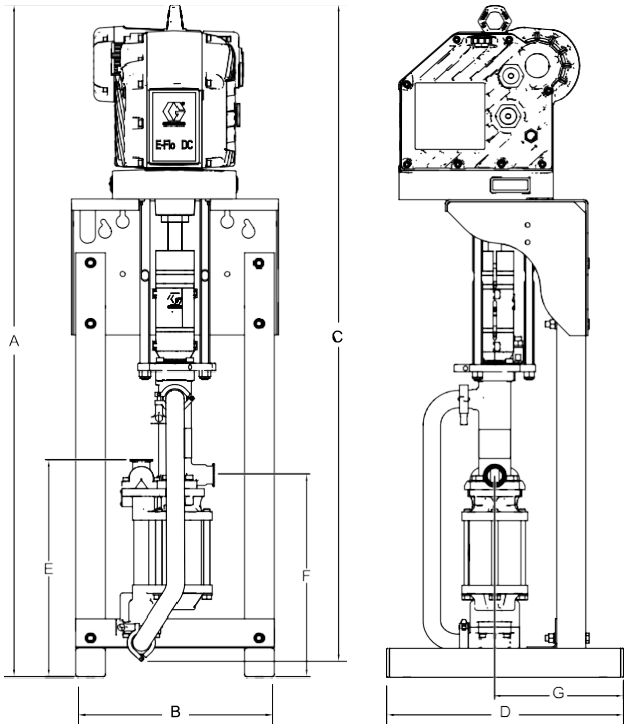

ti27988b

Pump with Sealed 4–Ball Plus Lower

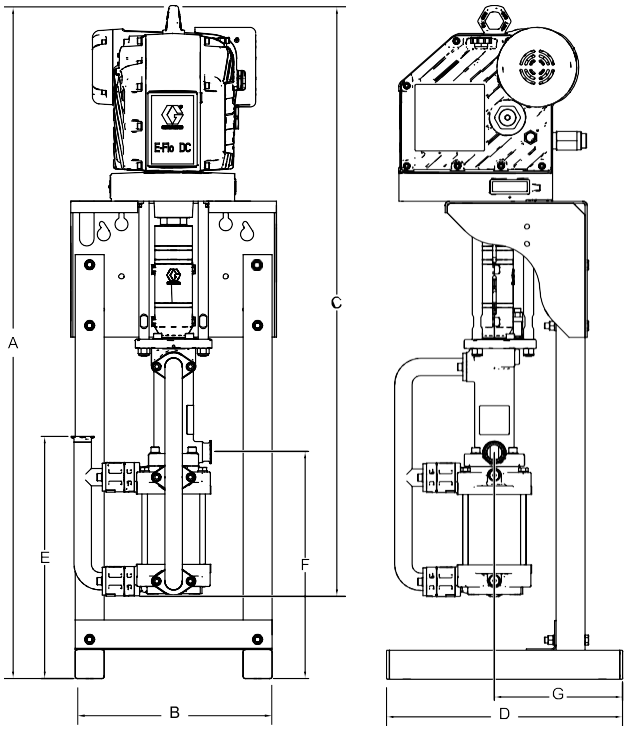

ti36072a

Pumps	A	B	C	D	E	F	G
DC 4-Ball	58.0 in. (147.3 cm)	17.0 in. (43.2 cm)	54.5 in. (138.4 cm)	19.8 in. (50.2 cm)	20.9 in. (53.0 cm)	19.6 in. (49.8 cm)	11.0 in. (27.9 cm)
Sealed 4-Ball Plus			51.0 in. (129.54 cm)				

Pump with Open Wet Cup Lower

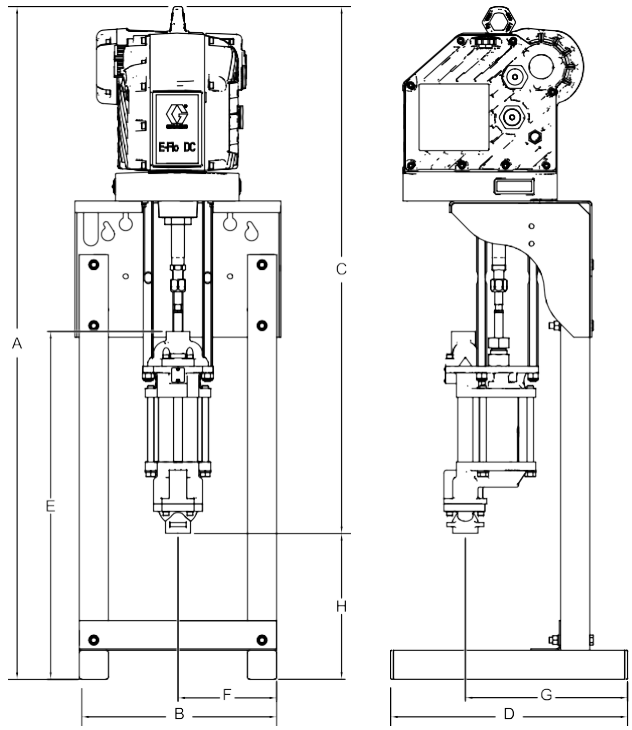

A	B	C	D	E	F	G	H
58.0 in. (147.3 cm)	17.0 in. (43.1 cm)	45.5 in. (115.6 cm)	19.9 in. (50.5 cm)	30.0 in. (76.2 cm)	8.5 in. (21.6 cm)	13.9 in. (35.3 cm)	7.1 in. (18.0 cm)

Mounting Hole Patterns

Floor Stand

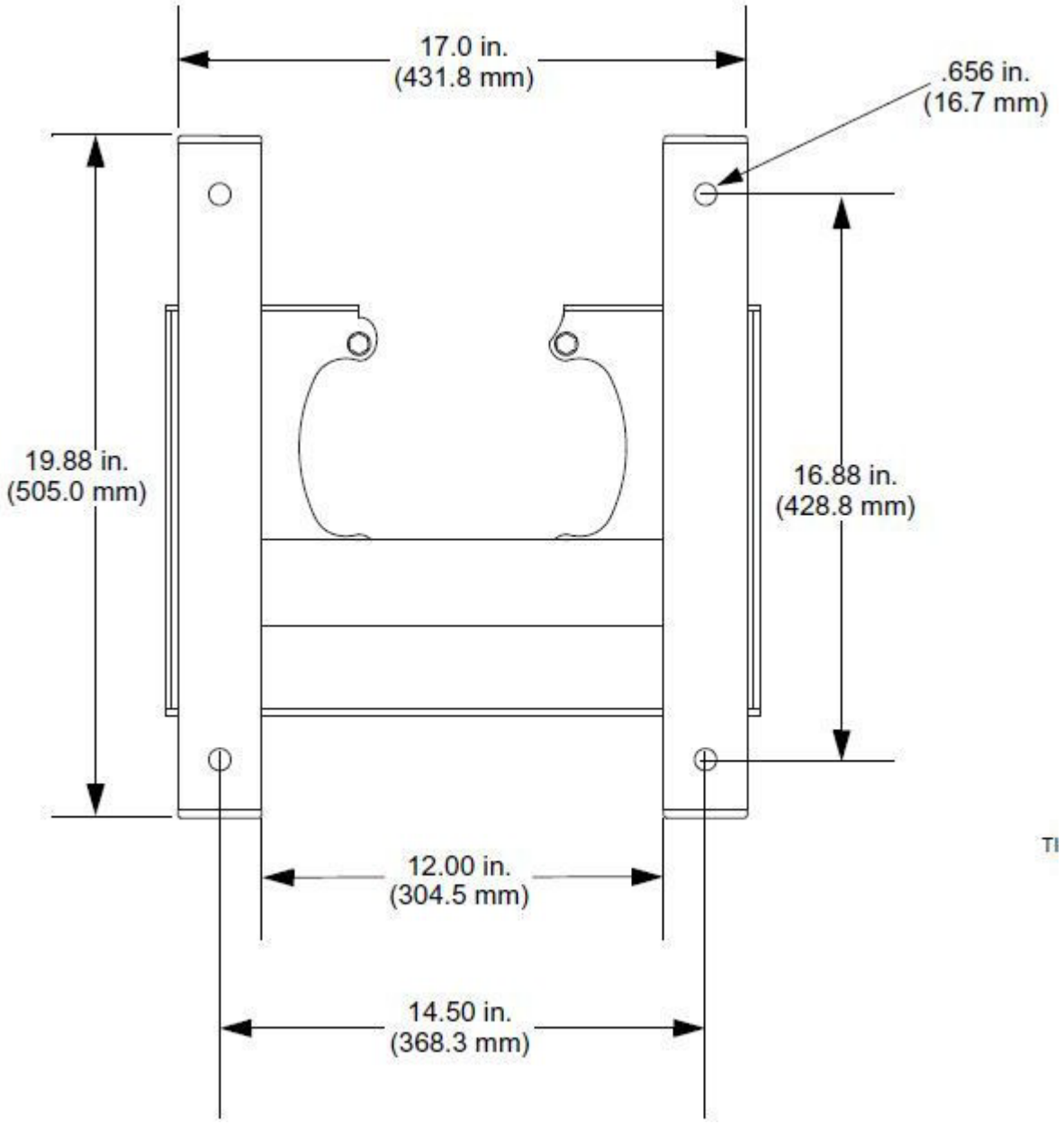

Pump Bracket

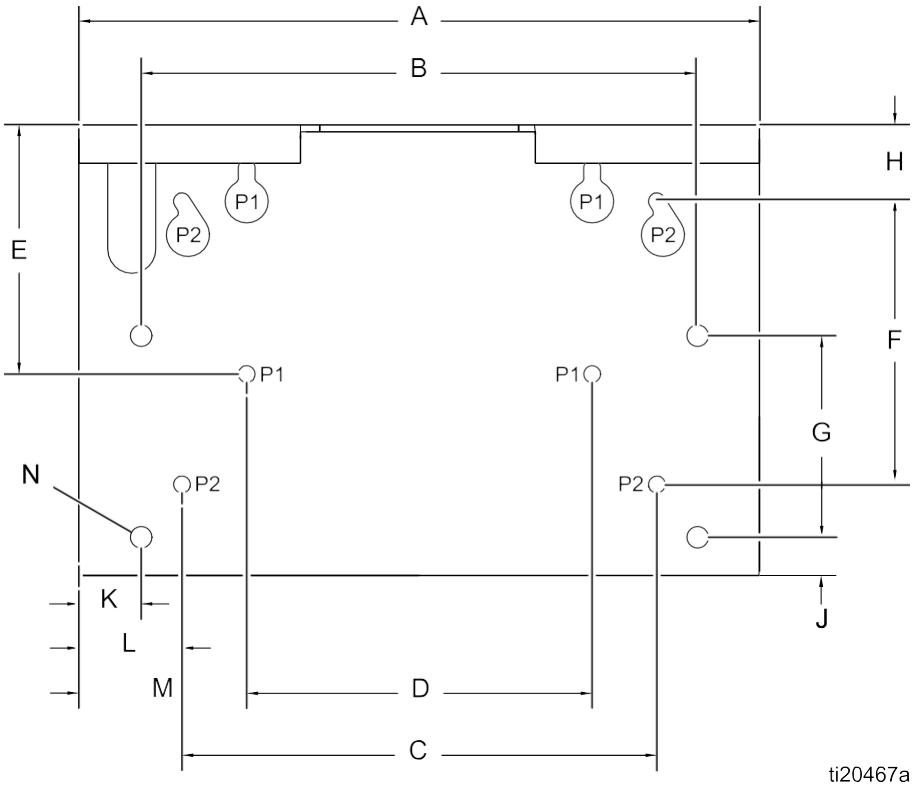

KEY

A	17.8 in. (451 mm)
B	14.5 in. (368 mm)
C	12.4 in. (314 mm)
D	9.0 in. (229 mm)
E	5.4 in. (137 mm)
F	7.4 in. (187 mm)
G	5.3 in. (133 mm)
H	2.0 in. (51 mm)
J	1.0 in. (25 mm)
K	1.6 in. (41 mm)
L	2.7 in. (69 mm)
M	4.4 in. (112 mm)
N	Four 0.562 in. (14 mm) diameter holes for mounting to stand
P	Four 0.438 in. (11 mm) diameter holes for mounting to wall

Performance Charts

To find the fluid pressure (psi/bar/MPa) at a specific fluid flow (gpm/lpm) and percentage of maximum force:

1. Locate the desired fluid flow in the scale at the bottom of the chart.
2. Follow the vertical line up to the intersection with the selected percentage of maximum force (see the **Key** below).
3. Follow left to the vertical scale to read the fluid outlet pressure.

Key to Performance Charts

NOTE: The charts show the motor operating at 100%, 70%, and 40% of maximum force. These values are approximately equivalent to an air motor operating at 100, 70, and 40 psi.

A	40% single phase
B	40% three phase
C	70% single phase
D	70% three phase
E	100% single phase
F	100% three phase

Models EC11xx and EC12xx (750 cc lower, 1 HP motor, 1400 lb maximum force)

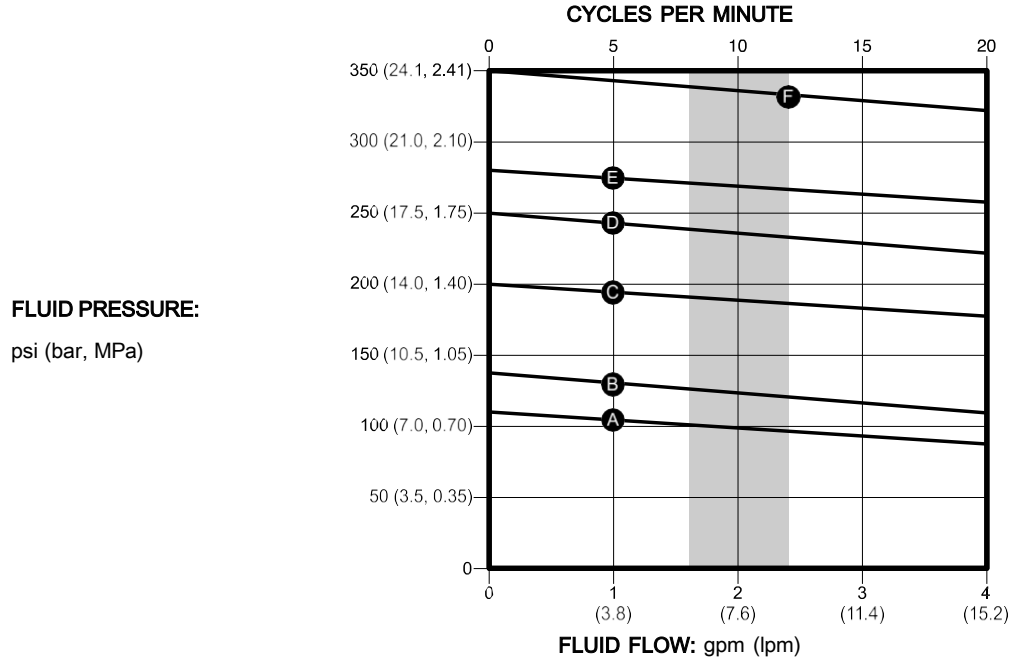

NOTE: The shaded area within the table shows the recommended range for continuous duty circulation applications.

Models EC21xx and EC22xx (1000 cc lower, 1 HP motor, 1400 lb maximum force)

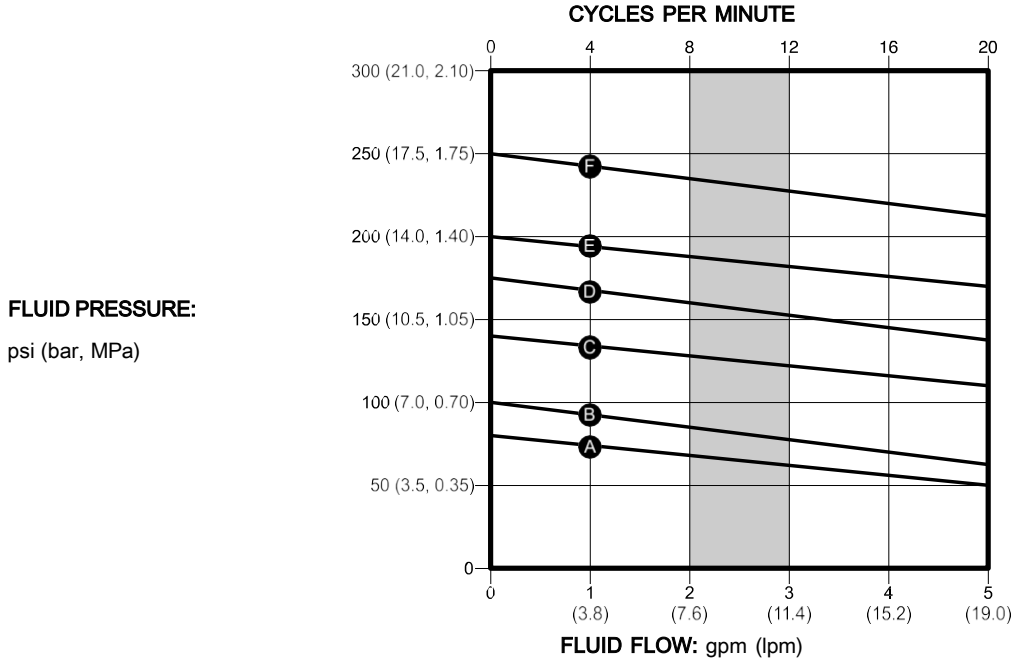

NOTE: The shaded area within the table shows the recommended range for continuous duty circulation applications.

Models EC23xx and EC24xx (1000 cc lower, 2 HP motor, 2800 lb maximum force)

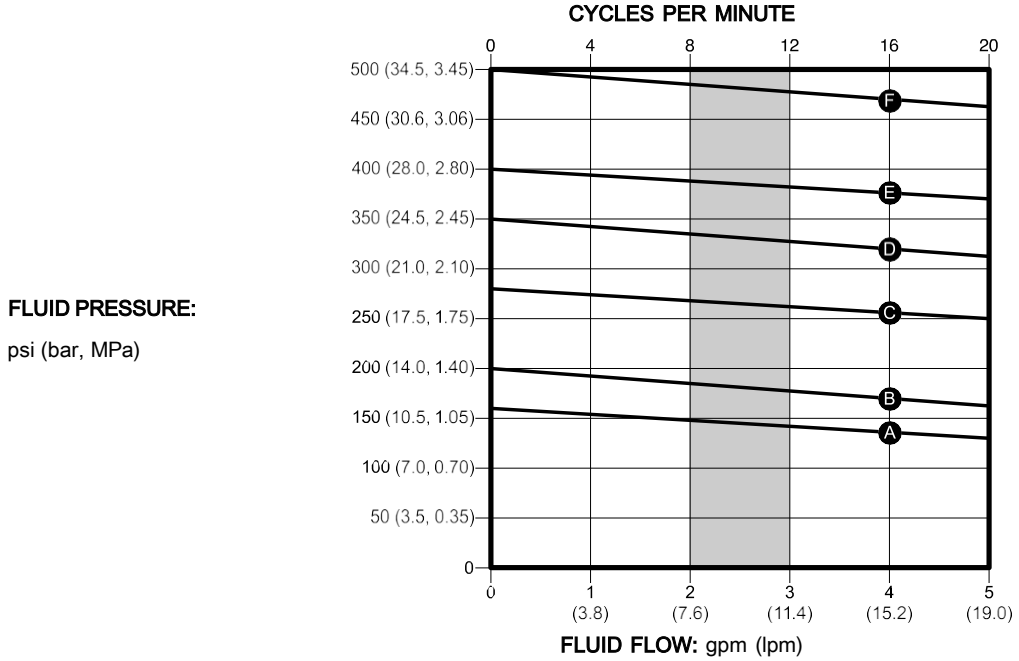

NOTE: The shaded area within the table shows the recommended range for continuous duty circulation applications.

Models EC33xx and EC34xx (1500 cc lower, 2 HP motor, 2800 lb maximum force)

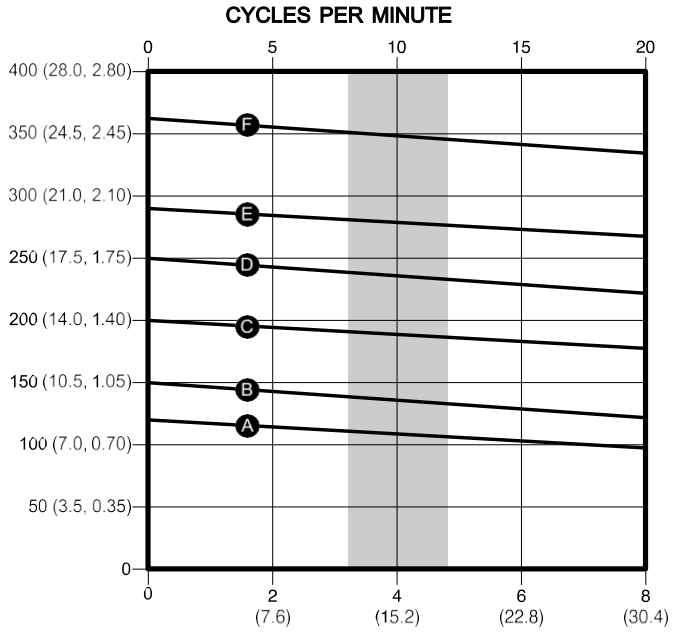

FLUID PRESSURE:

psi (bar, MPa)

NOTE: The shaded area within the table shows the recommended range for continuous duty circulation applications.

Models EC43xx and EC44xx (2000 cc lower, 2 HP motor, 2800 lb maximum force)

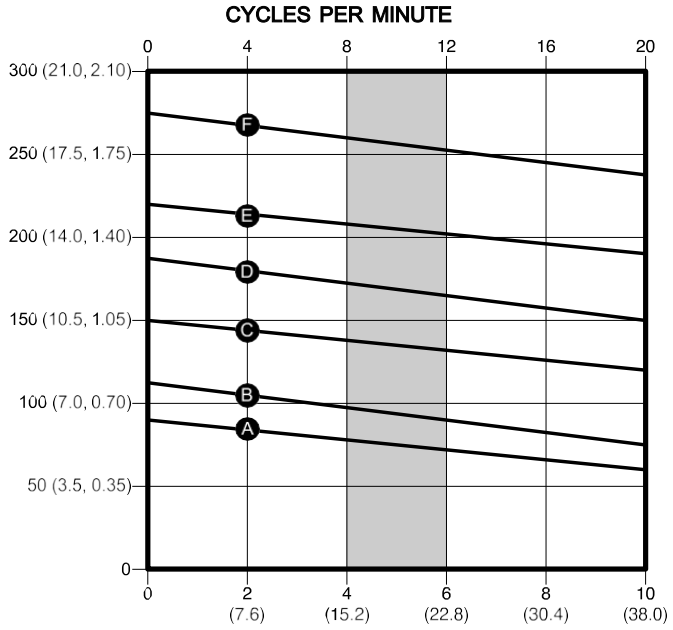

FLUID PRESSURE:

psi (bar, MPa)

NOTE: The shaded area within the table shows the recommended range for continuous duty circulation applications.

Models EC7x4x (2500 cc lower, 2 HP motor, 3500 lb maximum force)

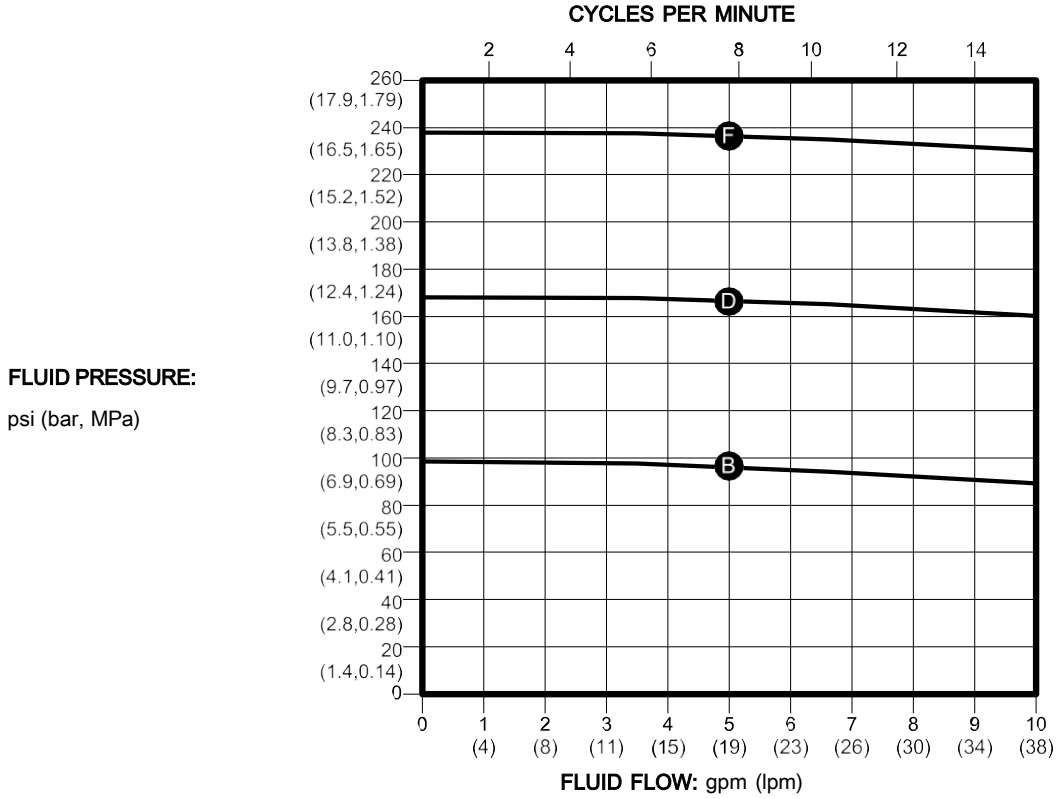

NOTE: The shaded area within the table shows the recommended range for continuous duty circulation applications.

Technical Data

E-Flo DC Pumps	U.S.	Metric
Maximum Fluid Working Pressure, Single Phase		
Models EC11xx, EC12xx, EC15xx, and EC16xx; 1 hp motor, 750 cc lower	300 psi	2.07 MPa, 20.7 bar
Models EC21xx, EC22xx, EC25xx, and EC26xx; 1 hp motor, 1000 cc lower	200 psi	1.38 MPa, 13.8 bar
Models EC23xx, EC24xx, EC27xx, and EC28xx; 2 hp motor, 1000 cc lower	400 psi	2.76 MPa, 27.6 bar
Models EC33xx, EC34xx, EC37xx, and EC38xx; 2 hp motor, 1500 cc lower	300 psi	2.07 MPa, 20.7 bar
Models EC43xx, EC44xx, EC47xx, and EC48xx; 2 hp motor, 2000 cc lower	220 psi	1.52 MPa, 15.2 bar
Maximum Fluid Working Pressure, Three Phase		
Models EC1Axx, EC1Bxx, EC1Exx, and EC1Fxx; 1 hp motor, 750 cc lower	375 psi	2.6 MPa, 26 bar
Models EC2Axx, EC2Bxx, EC2Exx, and EC2Fxx; 1 hp motor, 1000 cc lower	250 psi	1.7 MPa, 17 bar
Models EC2Cxx, EC2Dxx, EC2Gxx, and EC2Hxx; 2 hp motor, 1000 cc lower	530 psi	3.65 MPa, 36.5 bar
Models EC3Cxx, EC3Dxx, EC3Gxx, and EC3Hxx; 2 hp motor, 1500 cc lower	375 psi	2.6 MPa, 26 bar
Models EC4Cxx, EC4Dxx, EC4Gxx, and EC4Hxx; 2 hp motor, 2000 cc lower	275 psi	1.9 MPa, 19 bar
Models EC7x4x; 2 hp motor, 2500cc lower	240 psi	1.7 MPa, 17 bar
Maximum Potential Fluid Pressure, Single Phase		
Models ECx1xx, ECx2xx, ECx5xx, and ECx6xx; 1 hp motor	218000/v (volume of lower in cc) = psi	1500/v (volume of lower in cc) = bar
Models ECx3xx, ECx4xx, ECx7xx, and ECx8xx; 2 hp motor	436000/v (volume of lower in cc) = psi	3000/v (volume of lower in cc) = bar
Maximum Potential Fluid Pressure, Three Phase		
Models ECxAxx, ECxBxx, ECxExx, and ECxFxx; 1 hp motor	272500/v (volume of lower in cc) = psi	1875/v (volume of lower in cc) = bar
Models ECxCxx, ECxDxx, ECxGxx, and ECxHxx; 2 hp motor	545000/v (volume of lower in cc) = psi	3750/v (volume of lower in cc) = bar
Maximum Continuous Cycle Rate (all except EC7xxx models)	20 cpm	
Maximum Continuous Cycle Rate (EC7xxx models)	12 cpm	
Maximum Flow	Maximum flow is determined by the size of the pump lower. See Performance Charts, page 33.	
Maximum fluid inlet pressure	15 psi (0.1 MPa, 1.0 bar)	
Power Supply		
Models ECx1xx, ECx2xx, ECx5xx, and ECx6xx	100–250 Vac, single phase, 50/60 Hz, 1.4 kVA	
Models ECx3xx, ECx4xx, ECx7xx, and ECx8xx	200–250 Vac, single phase, 50/60 Hz, 2.9 kVA	

E-Flo DC Pumps	U.S.	Metric
Models ECxAxx, ECxBxx, ECxExx, and ECxFxx	380–480 Vac, three phase, 50/60 Hz, 1.5 kVA	
Models ECxCxx, ECxDxx, ECxGxx, and ECxHxx	380–480 Vac, three phase, 50/60 Hz, 3.0 kVA	
Power Inlet Port Size	3/4–14 npt(f)	
Ambient Temperature Range	32–104°F	0–40°C
Sound Data	Less than 70 dB(A)	
Oil Capacity	1.5 quarts	1.4 liters
Oil Specification	Graco Part No. 16W645 ISO 220 silicone-free synthetic gear oil	
Weight		
Models with sealed 4-ball lower (EC1x4x, EC2x4x, EC2xCx, EC3x4x, EC4x4x)	247 lb	112 kg
Models with sealed 4-ball plus lower (EC7x4x)	255 lb	116 kg
Models with open wet cup lower (ECxx5x and ECxx6x)	220 lb	100 kg
Fluid Inlet Size		
Models ECxx4x, ECxx6x, and EC7x4x	1–1/2 in. tri-clamp	
Models ECxx5x	1–1/2 in. npt(f)	
Fluid Outlet Size		
Models ECxx4x, ECxx6x, and EC7x4x	1–1/2 in. tri-clamp	
Models ECxx5x	1 in. npt(f)	
Wetted Parts	See Lower Pump manual.	

California Proposition 65

CALIFORNIA RESIDENTS

⚠ **WARNING:** Cancer and reproductive harm — www.P65warnings.ca.gov.

Graco Standard Warranty

Graco warrants all equipment referenced in this document which is manufactured by Graco and bearing its name to be free from defects in material and workmanship on the date of sale to the original purchaser for use. With the exception of any special, extended, or limited warranty published by Graco, Graco will, for a period of twelve months from the date of sale, repair or replace any part of the equipment determined by Graco to be defective. This warranty applies only when the equipment is installed, operated and maintained in accordance with Graco's written recommendations.

This warranty does not cover, and Graco shall not be liable for general wear and tear, or any malfunction, damage or wear caused by faulty installation, misapplication, abrasion, corrosion, inadequate or improper maintenance, negligence, accident, tampering, or substitution of non-Graco component parts. Nor shall Graco be liable for malfunction, damage or wear caused by the incompatibility of Graco equipment with structures, accessories, equipment or materials not supplied by Graco, or the improper design, manufacture, installation, operation or maintenance of structures, accessories, equipment or materials not supplied by Graco.

This warranty is conditioned upon the prepaid return of the equipment claimed to be defective to an authorized Graco distributor for verification of the claimed defect. If the claimed defect is verified, Graco will repair or replace free of charge any defective parts. The equipment will be returned to the original purchaser transportation prepaid. If inspection of the equipment does not disclose any defect in material or workmanship, repairs will be made at a reasonable charge, which charges may include the costs of parts, labor, and transportation.

THIS WARRANTY IS EXCLUSIVE, AND IS IN LIEU OF ANY OTHER WARRANTIES, EXPRESS OR IMPLIED, INCLUDING BUT NOT LIMITED TO WARRANTY OF MERCHANTABILITY OR WARRANTY OF FITNESS FOR A PARTICULAR PURPOSE.

Graco's sole obligation and buyer's sole remedy for any breach of warranty shall be as set forth above. The buyer agrees that no other remedy (including, but not limited to, incidental or consequential damages for lost profits, lost sales, injury to person or property, or any other incidental or consequential loss) shall be available. Any action for breach of warranty must be brought within two (2) years of the date of sale.

GRACO MAKES NO WARRANTY, AND DISCLAIMS ALL IMPLIED WARRANTIES OF MERCHANTABILITY AND FITNESS FOR A PARTICULAR PURPOSE, IN CONNECTION WITH ACCESSORIES, EQUIPMENT, MATERIALS OR COMPONENTS SOLD BUT NOT MANUFACTURED BY GRACO. These items sold, but not manufactured by Graco (such as electric motors, switches, hose, etc.), are subject to the warranty, if any, of their manufacturer. Graco will provide purchaser with reasonable assistance in making any claim for breach of these warranties.

In no event will Graco be liable for indirect, incidental, special or consequential damages resulting from Graco supplying equipment hereunder, or the furnishing, performance, or use of any products or other goods sold hereto, whether due to a breach of contract, breach of warranty, the negligence of Graco, or otherwise.

FOR GRACO CANADA CUSTOMERS

The Parties acknowledge that they have required that the present document, as well as all documents, notices and legal proceedings entered into, given or instituted pursuant hereto or relating directly or indirectly hereto, be drawn up in English. Les parties reconnaissent avoir convenu que la rédaction du présente document sera en Anglais, ainsi que tous documents, avis et procédures judiciaires exécutés, donnés ou intentés, à la suite de ou en rapport, directement ou indirectement, avec les procédures concernées.

Graco Information

For the latest information about Graco products, visit www.graco.com.
For patent information, see www.graco.com/patents.

To place an order, contact your Graco Distributor or call to identify the nearest distributor.

Toll Free Phone Number: 1-800-328-0211

All written and visual data contained in this document reflects the latest product information available at the time of publication. Graco reserves the right to make changes at any time without notice.

Original Instructions. This manual contains English, MM 3A3384

Graco Headquarters: Minneapolis
International Offices: Belgium, China, Japan, Korea

GRACO INC. AND SUBSIDIARIES • P.O. BOX 1441 • MINNEAPOLIS, MN 55440-1441 • USA

Copyright 2015, Graco Inc. All Graco manufacturing locations are registered to ISO 9001.

www.graco.com
Revision G, February 2026